# A Study of the Influence of Hg(6 $^3P_2$) Population in a Low-Pressure Discharge on Mercury Ion Emission at 194.2 nm

L. Maleki, B. J. Blasenheim, and G. R. Janik
Communications Systems Research Section

*A low-pressure mercury-argon discharge, similar to the type existing in the mercury lamp for the trapped-ion standard, is probed with a new technique of laser spectroscopy to determine the influence of the Hg(6 $^3P_2$) population on discharge emission. The discharge is excited with inductively coupled rf power. Variations in the intensity of emission lines in the discharge were examined as $\lambda = 546.1$-nm light from a continuous-wave (CW) laser excited the Hg(6 $^3P_2$) to (7 $^3S_1$) transition. The spectrum of the discharge viewed in the region of laser irradiation showed increased emission in $\lambda = 546.1$, 435.8, 404.7, 253.7, and 194.2 nm lines. Other lines in Hg I exhibited a decrease in emission. When the discharge was viewed outside the region of laser irradiation, all lines exhibited an increased emission. Based on these results, it is concluded that the dominant mechanism for the excitation of higher lying levels of mercury is the electron-impact excitation via the $^3P_2$ level. The depopulation of this metastable level is also responsible for the observed increase in the electron temperature when the laser irradiates the discharge. It is also concluded that the $^3P_2$ metastable level of mercury does not play a significant role in the excitation of the $^2P_{1/2}$ level of mercury ion.*

## I. Introduction

Mercury-argon discharges produce the light emission at 194.2 nm required for optical pumping in the trapped-mercury-ion frequency standard currently under development at the Jet Propulsion Laboratory (JPL). These discharges are one of the most widely studied examples of low-temperature plasmas. During the past 70 years or so, numerous investigators have studied the emission and absorption properties of mercury-rare gas discharges. The significance of these discharges to the lighting industry in particular has been responsible for extensive investigations, spanning practically all aspects of radiative, collisional, and plasma processes of this type of discharge.

The advent of laser spectroscopy has produced yet another tool for the investigation of mercury-rare gas discharges. In the authors' laboratory, for instance, lasers

have been used to study saturated absorption, optogalvanic, and phase-conjugate spectra in the mercury-argon discharge [1]. Other investigators have also examined laser-induced fluorescence (LIF) and laser-induced stimulated emission (LISE) in this type of discharge [2].

Despite the wealth of data on various parameters of mercury-argon discharges, a number of questions regarding this system have remained poorly answered. In particular, the significance of a metastable population in the discharge, while qualitatively understood in a general way, has been difficult to determine specifically. Various measurements have been made to determine the concentration and the influence of the population of the $^3P$ levels of mercury in the line emission and ionization of the discharge [3–6]. Yet definitive conclusions regarding the specifics of the effect of the metastable state population on the rate of ionization and excitation of atoms, molecules, excimers, and ions that may be present in mercury-rare gas discharges have been difficult to model because of a lack of data or understanding of all intervening processes.

Laser spectroscopic studies have provided further understanding of this problem, but have generated other questions. This is because modification of one of the discharge parameters by the laser can influence other parameters, sometimes in a nonlinear manner. Thus the details of the interaction of the laser light with discharges is not always well understood.

One of the most significant areas of data deficiency has been information delineating the role of metastables in the excitation process of the mercury ion. In fact, most models devised to provide a theoretical account of mercury-argon discharges [7–9] do not include excitation rates of the ion in determining plasma parameters. Yet the ion emission at 194.2 nm is the process of greatest interest in connection with the development of an efficient and reliable optical pumping light source for the trapped-mercury-ion frequency standard [10].

Thus, another study has been undertaken to examine the influence of a metastable population on the excitation processes in the mercury-rare gas discharges. In this study, laser spectroscopy of the discharge is utilized in a new way. Whereas LIF and LISE rely on the observation of light emitted from an upper energy level which is optically connected by the laser from a lower level, this laser-induced emission (LIE) spectroscopy examines the response of all lines in the spectrum of the discharge to the population changes in a metastable state that are created by the laser optical field. The major feature of this technique is that all excitation processes affected by the metastable population can be studied, including possible effects on the excitation of mercury atoms, ions, and the buffer gas.

Since results of investigations with discharges depend on the specific parameters, including the concentration of mercury and the rare gas, as well as the discharge excitation mode, they are often limited in their applicability. For this study, a low-pressure rf-excited discharge and the technique of laser spectroscopy were chosen to make results applicable to a general class of discharges that are deemed to be well behaved and relatively well understood. The rf discharge in the glow regime, with argon at less than one torr of pressure and mercury at about 30 degrees centigrade, is readily amenable to modeling. The inductive coupling of the rf power further simplifies the system through elimination of electrodes. The choice of low-power continuous-wave (CW) laser radiation permits additional simplification of the system under study through elimination of higher order light-induced processes, and provides a well-defined interaction channel for the laser and a discharge constituent. It is hoped that the study will assist in understanding of the significance of the metastable populations in the modeling of mercury-argon glows.

In the following section, the details of the experiment are outlined; the results are presented in Section III. The interpretation of the experimental results and the discussion are in Section IV. Finally, Section V provides a summary, conclusion, and an outline of plans for further study.

## II. The Experiment

The experimental apparatus in this study is schematically depicted in Figs. 1 and 2. Light generated at $\lambda = 546.1$ nm by a CW dye laser was introduced into a quartz discharge cell. The cylindrical cell had a diameter of 2.5 cm and a length of 10 cm. The cell contained a few milligrams of mercury, and argon at 800 mtorr of pressure. A similar cell containing neon at 500 mtorr instead of argon was also used. The discharge cell was inductively coupled to an rf oscillator, which also provided for the monitoring of the optogalvanic signal. The laser beam passed through a rectangular aperture to produce a ribbon of light which was then directed to the discharge cell along the axis.

Discharge emission was monitored by a 0.25-m monochromator with rectangular slits parallel to both the axis of the cell and laser light ribbon. The monochromator was blazed for 550 nm, and thus could not be effectively used for wavelengths below 190 nm or above 850 nm. The monochromator was mounted on a micrometer-driven translation stage for measuring discharge emission at various positions relative to the center of the laser light rib-

bon. A photomultiplier tube at the output port of the monochromator produced the detected signal that was fed to the input of a lock-in amplifier. The lock-in reference was provided by a chopper which chopped the laser beam on the way to the discharge cell. The output of the lock-in was fed to a chart recorder which recorded the spectral signals.

## III. Results

Results of the experiment are summarized in Table 1 and Figs. 3 and 4. The figures show the spectrum of the Hg-Ar discharge outside and inside the laser beam, respectively. Intensities given in the table were obtained directly from the spectra, and were not corrected for the spectral efficiency of the photomultiplier detector or the monochromator. Under the conditions of the experiment described in the previous section, a density of $1.7 \times 10^{17}/\mathrm{m}^3$ for the $^3P_2$ population in the discharge was measured using the absorption technique [14].

Because a discharge of the type under study does not satisfy the condition of local thermal equilibrium (LTE), calculation of the electron temperature using emission data of the discharge is not expected to give accurate results [14]. Nevertheless, an attempt was made to obtain an approximate electron temperature by using the emission data. The approximation was $T_e = 9600$ K in the discharge without the laser optical field.

When the monochromator monitored light emission of the discharge in a field of view within the region illuminated by the laser, the following lines exhibited an increase in their emission: 546.1, 435.8, 404.7, 253.7, and 194.2 nm. All other transitions from Hg I exhibited a reduction in light emission. When the monochromator viewed a region outside the ribbon of laser light, all lines in the emission exhibited an increase in intensity.

When the monochromator moved away from the axis of the cell where the laser illuminates the discharge, and towards the edge of the plasma, the intensity of the light emission due to the interaction of the laser with the plasma changed in a continuous manner. In fact, the change, which starts with a decrease and proceeds to a gradual increase in the light emission, is a very sensitive function of the position of the monochromator. Figure 5 exhibits such data for the 313.2- and 312.6-nm lines. Other lines in the Hg I spectrum (with the exception of those that increased in intensity and are listed above) behaved similarly. For different lines, however, the position of the point where the transition was made from an increase to a decrease in the emission varied along the translation axis.

## IV. Discussion

This section examines the ramifications of the experimental results for the role of the metastable levels of mercury in a discharge of the type described above. The discussion is specifically aimed at the mercury-argon discharge. But since the results with the mercury-neon discharge are qualitatively the same as the Hg-Ar discharge, all discussions apply to the case of Hg-Ne discharge as well. Three specific points are addressed:

(1) the process responsible for changes in the electron temperature in the discharge,

(2) the role of the $^3P_2$ level in the excitation of the higher lying levels of Hg I, and

(3) the role of the $^3P$ metastables in the ionization process in the discharge.

When the discharge is irradiated with $\lambda = 546.1$-nm light, the $^3P_2$ to $^3S_1$ transition is excited (see Fig. 6). Since the lifetime of the upper level is short (8 ns), excited $^3S_1$ levels quickly decay to all levels of the 6 $^3P$ manifold. In this way the population of the $^3P_2$ level is cycled to the $^3P_1$ and $^3P_0$ levels. Some of the population is cycled to the ground state through the $^3P_1$ level. Thus, the emission from the $^3S_1$ level at 404.7, 435.8, and 546.1 nm is expected to increase, and is observed to do so. The emission of the 253.7-nm line from the $^3P_1$ level is also expected, and is observed, to behave similarly.

It is known that one effect of the laser on the discharge is to increase the electron temperature $T_e$. This is readily verifiable from the observed sign of the optogalvanic signal in previous work done by the authors and in other studies [1,2]. The effect of the laser on the electron temperature, determined in the same manner as described above to obtain $T_e$, was to increase $T_e$ by less than 5 percent.

While there is no disagreement on the sign of the change in the electron temperature with laser irradiation, there is no universal agreement as to its origin. The general view is that $T_e$ increases in the discharge since ionization rate $R_i$ is directly dependent on the population of the $^3P_2$ level [8]. Since the laser irradiation depopulates this level, its effect on the discharge is to reduce $R_i$. The electric field subsequently increases to raise $T_e$, thus increasing ion production and maintaining plasma neutrality. The increase in the electron temperature then compensates for the loss of ion production created by the laser, and the ion density remains a constant. This explanation is generally given for dc discharges where the current through the discharge is held fixed. Its applicability to an rf glow discharge, where the assumption of the constancy of the current is not necessarily held, can be questioned.

The results of the study discussed here, however, do not support this reasoning. It was observed that there was an increase of 14.0 percent in the emission of the excited state ions at 194.2 nm with the Hg-Ar discharge in the region irradiated with the laser, an increase of 9.5 percent outside the region, and an increase of 7.5 percent both inside and outside the region with the Hg-Ne discharge. The 194.2-nm line corresponds to the $6p^2\ ^2P_{1/2} \rightarrow 6s\ ^2S_{1/2}$ transition in the ion. If the excitation of the ion is assumed to be the result of electron-impact excitation from the ground $6s^2\ \ ^2S_{1/2}$ state, then the excitation rate can be written as $R_i = n_e n_i K$, where $n_e$ and $n_i$ are the electron and ion densities, respectively, and $K$ is the rate coefficient and is related to $T_e$. An increase in $R_i$ means that one or more of the parameters will have to increase.

It is believed that the major influence of the laser on the electron parameters in the discharge is the increase in $T_e$, and not in the density $n_e$. This belief is based on the observed variation of the light intensity of different transitions while the laser illuminates the discharge. Since the intensity of transitions excited by electron collisions is directly proportional to $n_e$, one would expect a constant change in the intensity of all transitions when $n_e$ increases. It was observed, however, that there were variations in the intensity ranging from 4 to 18 percent for different transitions. On the other hand, such a variation in the intensity is expected if the electron temperature change is the primary result. This is because various transitions have different excitation cross sections for the same electron energy.

It could be argued that the decrease in the metastable population and the accompanying rise in $T_e$ does in fact leave the ground-state ion production a constant, but that the increase in electron temperature has a larger proportionate effect in the excitation of the ion. This could be true if the cross section of the excitation of the ion has a very rapid rise in slope with energy. Unfortunately, the shape of the cross-section curve for this transition is not accurately known at energies corresponding to the high-energy tail of the electron energy distribution of the discharge. A comparison with data on electron-impact excitation of the $^2P_{3/2}$ level [11] hints that such a dependence is conceivable only at threshold energies.

An increase in the number of electrons in the high-energy tail of the electron energy distribution could, however, account for the observed increase in the 194.2-nm emission. Using an equilibrium value of $T_e = 9600$ K and an increase of 3 percent in $T_e$ due to laser irradiation, it was calculated that there was an increase of approximately 14 percent in the number of electrons with energy above the first excitation threshold of mercury, assuming a Maxwellian electron energy distribution. Thus it is possible to attribute, at least partially, the observed increase in the ion emission at 194.2 nm to the increase in the number of high-energy electrons that could produce excited ions by collision with ground-state ions.

Nonetheless, the increase in the electron temperature with laser irradiation is evidently related to the metastable population depletion. Hence, two questions still remain:

(1) What mechanism produces the elevation in the electron temperature?

(2) What other processes may contribute to the observed increase in the 194.2-nm emission of the ion when the laser optical field is applied to the discharge?

It is proposed that the principal mechanism responsible for the increase in electron temperature is the process of two-step electron-impact excitation of the higher lying states: the first excitation occurs from the ground level to the metastable $^3P_2$ level, and a second electron impact excites the atom from the metastable to the higher lying level. The observed decrease in the intensity of the light emission from virtually all higher lying transitions with laser radiation is evidence for the importance of this channel for electron-impact excitation in the discharge. Since inelastic collisions of electrons with discharge particles siphon the electron energy, the diminishing of the electron-impact excitation channel caused by the laser through depopulation of the $^3P_2$ level results in the increase of the average energy of the electrons.

A corollary to the above argument is that the size of the cross section for the excitation of the higher lying states from this metastable level is significantly larger than that for the direct excitation from the ground state, or excitation out of the other levels in the 6 $^3P$ manifold, whose population is also increased with the applied laser field. The particular finding regarding the role of metastable levels in the excitation of higher lying levels in mercury is well known. The results of this study, however, provide a direct observation of this effect, and also point to the relative significance of the $^3P_2$ level in comparison to the other metastables in the manifold. A quantitative measure of the relative strength of the direct versus the two-step excitation of the levels via the metastables may also be possible with the LIE technique.

The observation that the ion transition is apparently independent of the $^3P_2$ population is somewhat surprising. This is because there have been suggestions in the

past [8,11] that a significant mechanism for the production of mercury ions is via the autoionization of high-lying levels that converge to the 6 $^2D$ manifold of the ion. The autoionizing levels themselves are expected to be primarily populated by electron collision with the metastable $^3P_2$ level of the atom, since their direct excitation would require higher electron energies not available in a low-temperature discharge.

The observation of the increase in the ion emission with the decrease in the metastable population also apparently weakens the case for a suggested [8] associative ionization process involving the $^3P_2$ level in collision with other metastables:

$$\mathrm{Hg}(6\,^3P_2) + \mathrm{Hg}(6\,^3P_2) \rightarrow \mathrm{Hg}^+ + \mathrm{Hg}(6\,^1S_0) + e \qquad (1)$$

If this were an important mechanism for ion production in discharges of the type in this study, the laser depopulation of the $^3P_2$ would produce a decrease in the intensity of the 194 transition, rather than the observed increase.

The observation of an increase in the 194.2-nm ion emission in parallel with the decrease in the $^3P_2$ population in the laser-irradiated discharge leads to the conclusion that the $^3P_0$ and the $^3P_1$ levels, whose populations increase with the applied laser field, may have a more significant role in the ionization process than the $^3P_2$ level. This conclusion is in contrast to previous works [7,12] where the $^3P_2$ level is regarded to be at least as important as the other metastables in ion production. The $^3P_1$ level, on the other hand, could be the major contributor to the ionization process in the discharge through processes such as

$$\mathrm{Hg}(6\,^3P_1) + \mathrm{Hg}(6\,^3P_1) \rightarrow \mathrm{Hg}(6p'\,^1P^o) + \mathrm{Hg}(6\,^1S_0)$$

$$\mathrm{Hg}(6p'\,^1P^o) + e \rightarrow \mathrm{Hg}^+ + 2e \qquad (2)$$

The population of the 6 $^3P_1$ level may also increase outside of the laser beam in the discharge, thus providing an explanation for the observed increase in the 194.2-nm emission away from the discharge axis. This is possible through the absorption of the excess 254-nm light created by the laser. As mentioned above, 254-nm line emission was observed to increase both inside and outside the region of laser illumination. Thus, radiation transport increases the population of the $^3P_1$ level outside the region illuminated by the laser.

It should be emphasized that the second process above is believed by Vriens et al. [8] to have a significantly smaller rate than the first process, which was excluded as an explanation for the results. If this first process does in fact have a higher rate than the second process, then other processes involving the $^3P_1$ and $^3P_0$ level must be examined to explain the observed behavior of the discharge emission. Candidate processes include electron-impact excitation of highly excited states, which are in turn produced by collision of atoms in the $^3P_{1,0}$ states [4]. Collisions involving these states have also been found to be responsible for the formation of molecular ions [13], which could subsequently result in 194.2-nm emission by electron-impact dissociation.

The results relating to the change of the intensity with the position of the monochromator (depicted in Fig. 5) are readily explained. When the monochromator views the region illuminated by the laser, only the portion of the observed light intensity affected by the depletion of the metastable population is observed. Note here that the decreased light intensity is the sum of the decrease due to the depletion of the metastable and increased light intensity due to the increase in the electron temperature.

As the monochromator is moved away from the axis of the discharge, it simultaneously views the region that is illuminated by the laser and regions outside of the illuminated area. Depending on the size of the two regions within the field of view of the monochromator, and depending on the ratio of the rate of direct excitation over excitation involving the $^3P_2$ level, the intensity of each transition will change. Obviously, there will also be a region where the two processes exactly balance each other out, and no change in intensity will be observed, as seen in Fig. 5.

## V. Summary and Conclusion

This study examined the role of the $^3P_2$ metastable of mercury in a low-pressure discharge. The study used a simple discharge at low mercury and buffer gas pressure, together with the inductively coupled rf excitation mode, in order to make the results of the study more generally applicable. The discharge was then probed with a new technique of laser spectroscopy to study the effect of the metastable population on all discharge emissions.

The results have led to essentially three conclusions:

(1) The $^3P_2$ level plays a significant role in electron-impact excitation of high-lying levels of mercury.

(2) The observed increase in electron temperature with the applied optical field is due to the diminishing of

the electron-excitation channel in collision with the $^3P_2$ metastables, which increases the average energy of the electron distribution in the discharge.

(3) The $^3P_2$ level appears to play a smaller role in the ionization rate than the $^3P_1$ and $^3P_0$ levels.

The second conclusion implies that a quenching of the $^3P_2$ population may increase the electron energy and the emission of the 194.2-nm ion line and 253.7-nm line of the neutral mercury. This implies that more efficient lamps for the mercury-ion standard may be designed through approaches that result in quenching the population of the $^3P_2$ level. This may be accomplished, for example, by adding a small amount of a molecular gas such as nitrogen that could quench the metastable level by collision. The last conclusion is in contrast to the general view regarding the role of metastables in the ionization processes in mercury-rare gas discharges. The article pointed out candidate processes involving $^3P_{1,0}$ levels that could lead to the observed 194.2-nm emission of the mercury ion. Further studies are required to ascertain the role of metastable levels in the ionization process in mercury-argon discharges.

Laser-induced emission spectroscopy may be useful in making quantitative measurements of the relative rates and cross sections for the direct and two-step collisional processes involving the $^3P_2$ level. This could be accomplished if the magnitude of metastable population in the field of view of the monochromator could be determined. Future studies to employ the technique described here, together with studies employing other buffer gases, are currently being planned. Processes involving $^3P_{1,2}$ collisions that were identified as possible mechanisms for the observed increase in 194.2-nm emission require further investigations to develop a better understanding of their role in low-pressure glow discharges.

## Acknowledgments

The authors wish to thank J. M. Christman and J. L. Streete for their contributions in the initial stages of this experiment.

## References

[1] W. H. Richardson, L. Maleki, and E. Garmire, "Experimental and Theoretical Investigation of the Optogalvanic Effect in a Hg-Ar Discharge," *Phys. Rev. A*, vol. 36, no. 12, pp. 5713–5728, December 15, 1987.

[2] P. van de Weijer and R. M. M. Cremers, "Pulsed Optical Pumping in Low Pressure Mercury Discharges," in *Radiative Processes in Discharge Plasmas*, J. M. Proud and L. H. Laussen, editors, New York: Plenum, 1986.

[3] M. Koedam and A. A. Kruithof, "Transmission of the Visible Mercury Triplet by the Low Pressure Mercury-Argon Discharge: Concentration of the 6 $^3P$ States," *Physica*, vol. 28, no. 1, pp. 80–100, January 1962.

[4] P. van de Weijer and R. M. M. Cremers, "Experimental Determination of 6 $^3P$ – 6 $^3P$ Collisional Excitation Cross Sections for Line Emission in the Positive Column of dc Mercury Discharges," *J. Appl. Phys.*, vol. 53, no. 3, pt. 1, pp. 1401–1408, March 1982.

[5] P. D. Johnson, "Excitation of $Hg^+$ 1942 Å in the High-Current–Low-Pressure Discharge," *Appl. Phys. Lett.*, vol. 18, no. 9, pp. 381–382, 1971.

[6] T. Lin and T. Goto, "$Hg^+$ Ion Density in Low-Pressure Ar-Hg Discharge Used for a Mercury Lamp," *J. Appl. Phys.*, vol. 66, no. 7, pp. 2779–2282, October 1, 1989.

[7] M. A. Cayless, "Theory of the Positive Column in Rare-Gas Discharge," *Brit. J. Appl. Phys.*, vol. 14, no. 12, pp. 863–869, December 1963.

[8] L. Vriens, R. A. J. Keijser, and F. A. S. Lighthart, "Ionization Processes in the Positive Column of the Low-Pressure Hg-Ar Discharge," *J. Appl. Phys.*, vol. 49, no. 7, pp. 3807–3813, July 1978.

[9] J. T. Dakin, "A Model of Radial Variations in the Low-Pressure Mercury-Argon Positive Column," *J. Appl. Phys.*, vol. 60, no. 2, pp. 563–570, July 15, 1986.

[10] J. D. Prestage, G. J. Dick, and L. Maleki, "The JPL Trapped Ion Frequency Standard Development," *Proceedings of the 19th Annual Precise Time and Time Interval Applications and Planning Meeting*, R. L. Sydnor, editor, Washington, D.C.: U.S. Naval Observatory, pp. 285–297, 1987.

[11] D. H. Crandall, R. A. Phaneuf, and G. H. Dunn, "Electron Impact Excitation of Hg," *Phys. Rev. A*, vol. 11, no. 4, pp. 1223–1232, April 1975.

[12] J. Polman, J. E. Van der Werf, and P. C. Drop, "Nonlinear Effects in the Positive Column of a Strongly Modulated Mercury-Rare Gas Discharge," *J. Phys. D*, vol. 5, no. 2, pp. 266–279, February 1972.

[13] K. L. Tan and A. von Engel, "Energy transfer from excited mercury atoms to electrons," *Proc. R. Soc. London Ser. A*, vol. 324, pp. 183–200, 1971.

[14] F. Cabbanes and J. Chapelle, "Spectroscopic Plasma Diagnostics," in *Reactions Under Plasma Conditions*, M. Venugopalan, editor, pp. 367–469, New York: Wiley-Interscience, 1971.

**Table 1. Experimental results**

| Wavelength, nm | Transition | Percent change Ar on-axis | Percent change Ar off-axis | Percent change Ne on-axis | Percent change Ne off-axis |
|---|---|---|---|---|---|
| 690.7 | $8^3P_2 - 7^3S$ | −43 | 24 | −20 | 4 |
| 579.0 | $6^1D_2 - 6^1P$ | −6.3 | 6.0 | −7.8 | 4 |
| | $6^3D_1 - 6^1P_1$ | | | | |
| 577.0 | $6^3D_2 - 6^1P_1$ | −7.4 | 6.1 | −16 | 2.5 |
| 546.1 | $7^3S - 6^3P_2$ | 175 | 18 | 363 | 33 |
| 435.8 | $7^3S - 6^3P_1$ | 137 | 50 | 213 | 31 |
| 407.8 | $7^1S - 6^3P_1$ | −7 | 13 | −4 | 5 |
| 404.7 | $7^3S - 6^3P_0$ | 311 | 32 | 152 | 36 |
| 390.6 | $8^1D - 6^1P$ | −18 | 10 | −7 | 5 |
| 366.3 | $6^1D - 6^3P_2$ | −13 | 6.2 | −3.9 | 5.9 |
| | $6^3D_1 - 6^3P_2$ | | | | |
| 365.4 | $6^3D_2 - 6^3P_2$ | −21 | 6 | −11 | 5 |
| 365.0 | $6^3D_3 - 6^3P_2$ | −7 | 3.5 | −8.6 | 4 |
| 334.1 | $8^3S - 6^3P_2$ | −17 | 11 | −6.7 | 5.2 |
| 313.2 | $6^1D - 6^3P_1$ | −11 | 5.4 | −4.7 | 5.8 |
| | $6^3D_1 - 6^3P_1$ | | | | |
| 312.6 | $6^3D_2 - 6^3P_1$ | −18 | 4.7 | −9.5 | 4.4 |
| 302.3 | $7^3D_1 - 6^3P_2$ | −8.2 | 8.6 | −4.5 | 7.8 |
| | $7^3D_2 - 6^3P_2$ | | | | |
| | $7^3D_3 - 6^3P_2$ | | | | |
| 296.7 | $6^1D - 6^3P_0$ | −12 | 6 | −9 | 4 |
| | $6^3D_1 - 6^3P_0$ | | | | |
| 292.5 | $9^3S - 6^3P_2$ | −13 | 9 | −6 | 6 |
| 289.4 | $8^3S - 6^3P_1$ | −13 | 8 | −7 | 5 |
| 280.5 | $8^1D - 6^3P_2$ | −11 | 10 | −6 | 7 |
| | $8^3D_1 - 6^3P_2$ | | | | |
| | $8^3D_2 - 6^3P_2$ | | | | |
| | $8^3D_3 - 6^3P_2$ | | | | |
| 276.0 | $10^3S - 6^3P_2$ | −14 | 7 | −5 | 5 |
| 275.3 | $8^3S - 6^3P_0$ | −15 | 9 | −8 | 5 |
| 269.9 | $9^3D_3 - 6^3P_2$ | −6 | 13 | −4 | 7 |
| 265.4 | $7^1D - 6^3P_1$ | −14 | 7 | −7 | 7 |
| | $7^3D_1 - 6^3P_1$ | | | | |
| | $7^3D_2 - 6^3P_1$ | | | | |
| 257.6 | $9^3S - 6^3P_1$ | −16 | 8 | −7 | 5 |
| 253.7 | $6^3P_1 - 6^1S$ | 12.3 | 3.0 | 4.6 | 2.1 |
| 248.3 | $8^1D_2 - 6^3P_1$ | −13 | 7 | −7 | 6 |
| | $8^3D_1 - 6^3P_1$ | | | | |
| | $8^3D_2 - 6^3P_1$ | | | | |
| 239.9 | $9^3D_2 - 6^3P_1$ | −10 | 8 | −7 | 7 |
| 237.8 | $8^3D_1 - 6^3P_0$ | −11 | 7 | −1 | 6 |
| 235.2 | $10^3D_2 - 6^3P_1$ | −10 | 10 | −5 | 10 |
| 230.2 | $9^3D_1 - 6^3P_0$ | −14 | 10 | −7 | 8 |
| 194.2 | $6^2P_{1/2} - 6^2S_{1/2}$ (ion transition) | 14 | 10 | 7 | 7 |

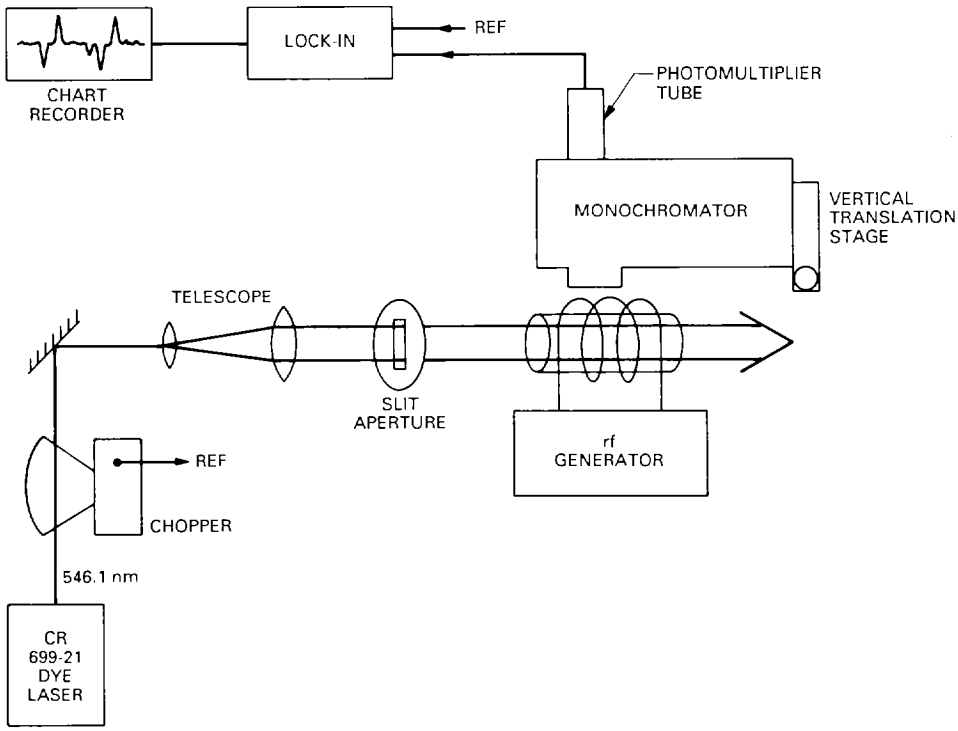


**Fig. 1. Schematic of the apparatus.**

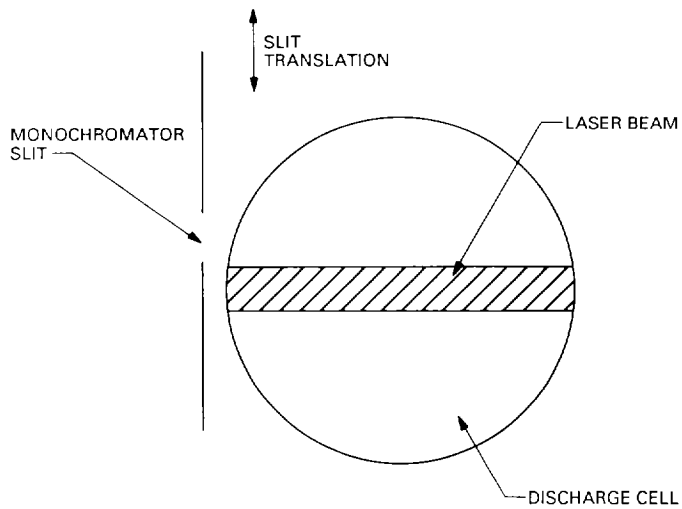


**Fig. 2. Detailed view of the observation region.**

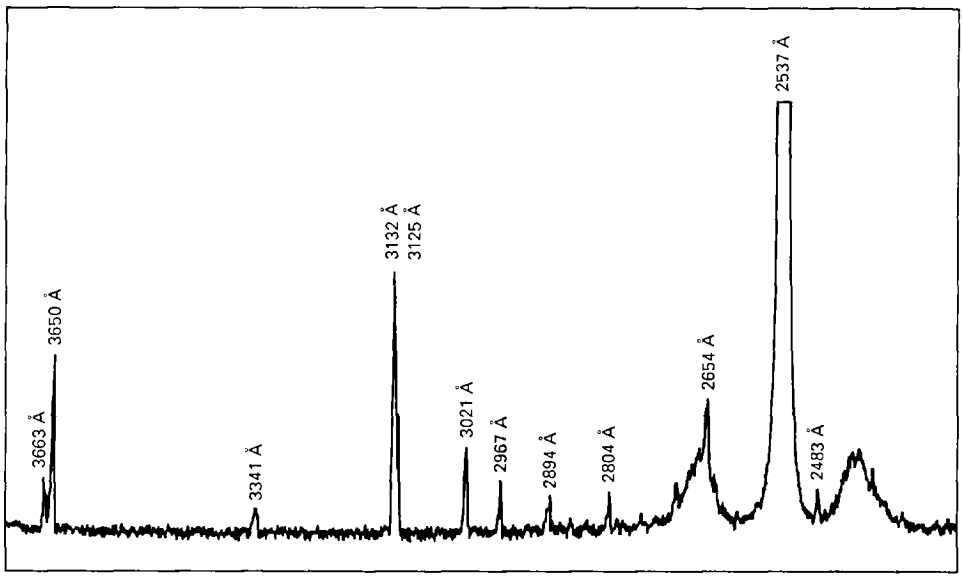


Fig. 3. A partial scan of the monochromator while it is viewing outside the laser ribbon. Positive peaks indicate that the emission increases while the laser is present. The two broad peaks are artifacts of the monochromator connected with the resonance line.

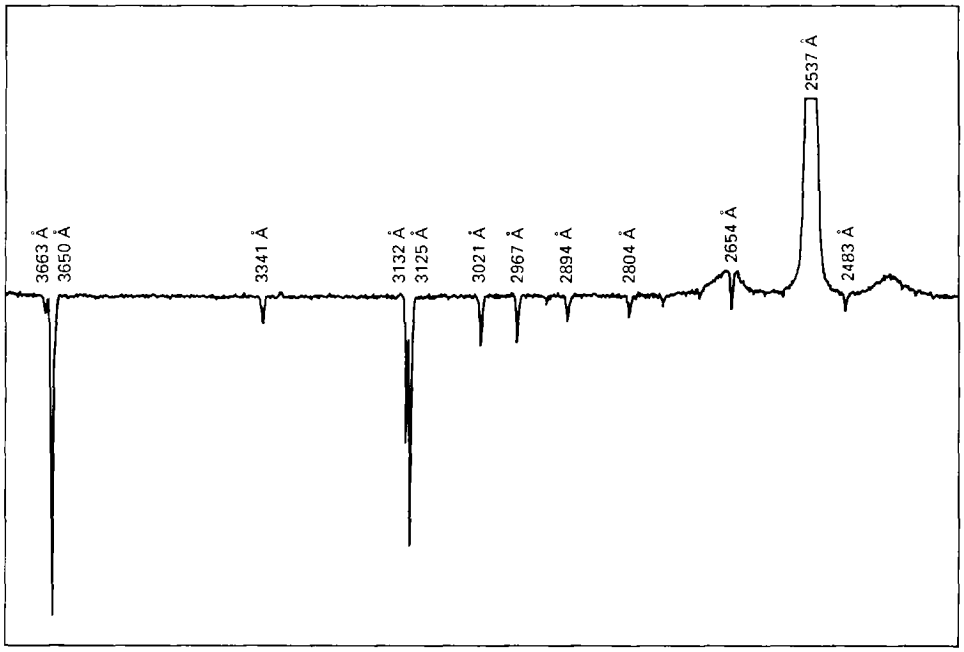


Fig. 4. A partial scan over the same range as in Fig. 3, but viewing within the laser ribbon. All lines except the resonance at 2537 Å have reversed, indicating that they now reduce in intensity while the laser is present.

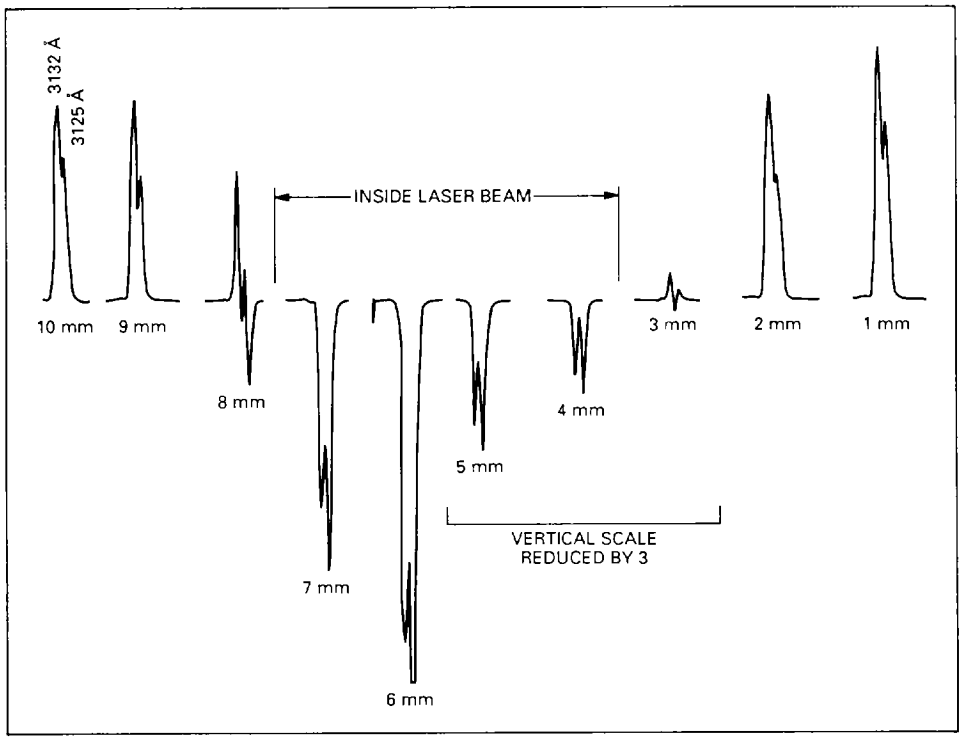


**Fig. 5. Short spectral scans over the 3132, 3125 Å doublet as a function of monochromator translation at intervals of 1 mm. The reversal while viewing within the laser beam is clearly apparent.**

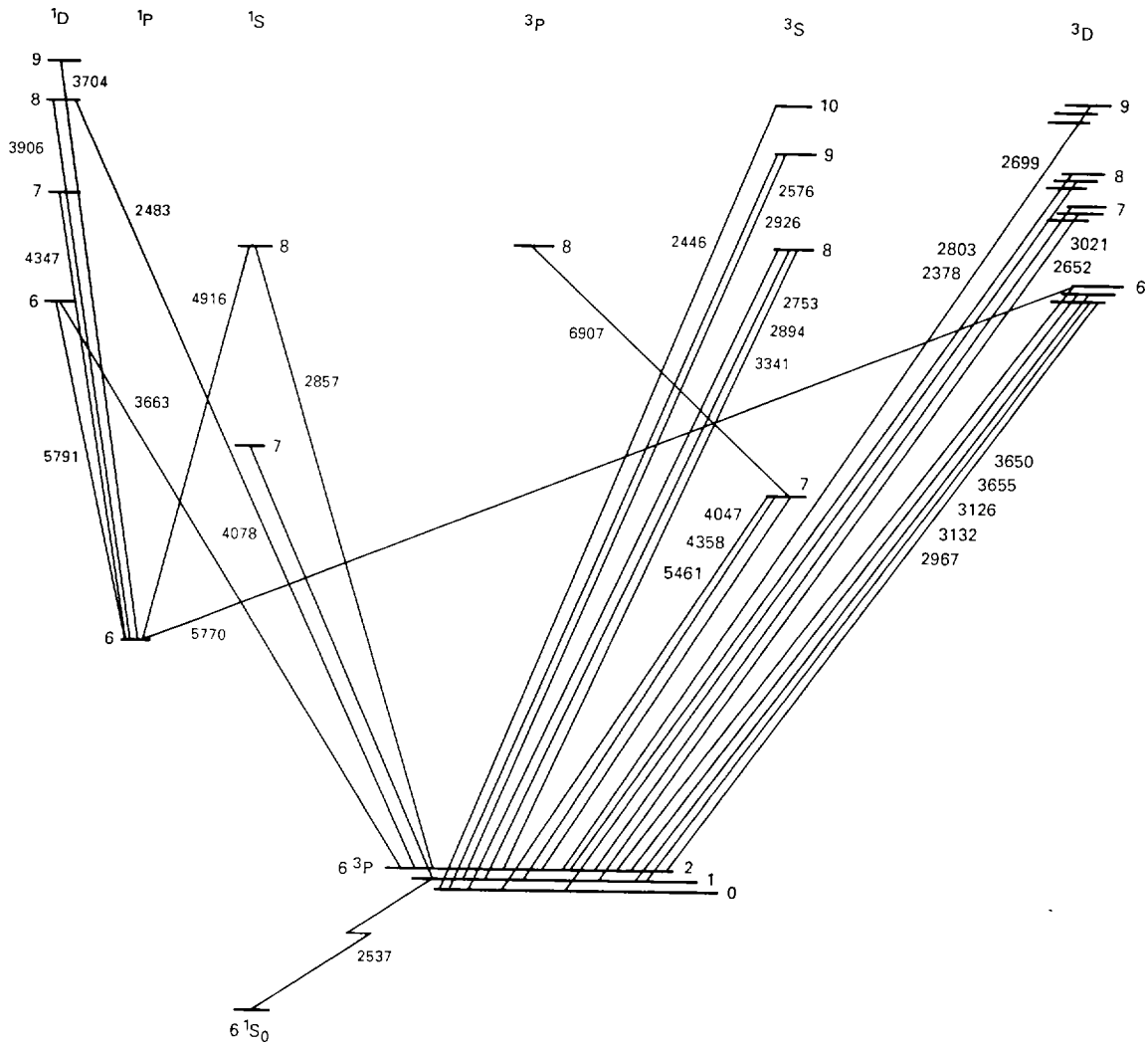


Fig. 6. A Grotrian diagram showing all the transitions observed in Hg I.