Next-Generation Ground Network Architecture for Communications and Tracking of Interplanetary Smallsats

Kar-Ming Cheung,* Douglas Abraham,† Belinda Arroyo,‡ Eleanor Basilio,▲ Alessandra Babuscia,* Courtney Duncan,△ Dennis Lee,* Kamal Oudrhiri,* Timothy Pham,■ Robert Staehle,□ Stefan Waldherr,‡ Gregory Welz,▲ Jay Wyatt⋀

Marco Lanucara,♦ Benjamin Malphrus,❖ John Bellardo,☆ Jordi Puig-Suari,☆ Sabrina Corpino✪

ABSTRACT. — As small spacecraft venture out of Earth orbit, they will encounter challenges not experienced or addressed by the numerous low Earth orbit (LEO) CubeSat and smallsat missions staged to date. The LEO CubeSats typically use low-cost, proven CubeSat radios, antennas, and university ground stations with small apertures. As more ambitious yet cost-constrained space mission concepts to the Moon and beyond are being developed, CubeSats and smallsats have the potential to provide a more affordable platform for exploring deep space and performing the associated science. Some of the challenges that have, so far, slowed the proliferation of small interplanetary spacecraft are those of communications and navigation.

Unlike Earth-orbiting spacecraft that navigate via government services such as North American Aerospace Defense Command's (NORAD's) tracking elements or the Global Positioning Satellite (GPS) system, interplanetary spacecraft would have to operate in a fundamentally different manner that allows the deep-space communications link to provide both command/telemetry and the radiometric data needed for navigation. Another challenge occurs when smallsat and CubeSat missions would involve multiple spacecraft that require near-simultaneous communication and/or navigation, but have a very limited number of ground antenna assets, as well as available spectrum, to support their links.

This topic was presented as a keynote talk at the CubeSat Developer Workshop, May 2015, San Luis Obispo, California. This article provides additional details and updates to the presented charts.

* Communications Architectures and Research Section; † Architecture, Strategic Planning, and System Engineering Office; ‡ DSN/Mission Services Planning and Management Office; ▲ Mission Systems Engineering Section; △ Flight Communications Systems Section; ■ Communications, Tracking, and Radar Division; □ Instruments Division; ⋀ Space Networking and Mission Automation Tech Program; ♦ European Space Agency; ❖ Morehead State University; ☆ California Polytechnic State University; ✪ Politecnico di Torino.

The research described in this publication was carried out by the Jet Propulsion Laboratory, California Institute of Technology, under a contract with the National Aeronautics and Space Administration. © 2015. All rights reserved.

To address these challenges, the Jet Propulsion Laboratory (JPL) and the Deep Space Network (DSN) it operates for NASA are pursuing the following efforts:

(1) Developing a CubeSat-compatible, DSN-compatible transponder — Iris — which a commercial vendor can then make available as a product line.

(2) Developing CubeSat-compatible high-gain antennas — deployable reflectors, reflectarrays, and inflatable antennas.

(3) Streamlining access and utilization processes for DSN and related services such as the Advanced Multi-Mission Operations System (AMMOS).

(4) Developing methodologies for tracking and operating multiple spacecraft simultaneously, including spectrum coordination.

(5) Coordination and collaboration with non-DSN facilities.

This article further describes the communications and tracking challenges facing interplanetary smallsats and CubeSats, and the next-generation ground network architecture being evolved to mitigate those challenges.

I. Introduction

Today, most CubeSats operate in low Earth orbit (LEO), typically using low-cost, proven CubeSat radios, antennas, and university ground stations with small aperture. As more ambitious yet cost-constrained space mission concepts are being developed, moving from LEO to the Moon and beyond, CubeSats and smallsats[1] have the potential to provide the means to explore deep space and to perform science in a more affordable way. One of the bottlenecks for the proliferation of interplanetary CubeSats and smallsats is communication and tracking between the spacecraft and Earth over the vast distance of deep space.

This article discusses the communications and tracking challenges of the interplanetary[2] smallsats, and proposes a next-generation Deep Space Network (DSN) architecture that would mitigate those challenges.

The DSN consists of Deep Space Communications Complexes (DSCCs) with ground stations located near Madrid, Spain; Canberra, Australia; and Goldstone, California. At each complex there are a variety of antennas, including 34-m beam-waveguide (BWG), 34-m high-efficiency (HEF), and 70-m antennas. In addition, the DSN supports radio frequency (RF) testing using the following facilities: the Development and Test Facility (DTF-21), located near NASA's Jet Propulsion Laboratory (JPL); the Compatibility Test Trailer (CTT-22), which is able to come to the spacecraft site; and the DSN test facility (MIL-71) located at NASA's Kennedy Space Center, Florida. The current DSN architecture is depicted in Figure 1.

The major communications and tracking challenges of interplanetary smallsats are as follows:

---

[1] The term CubeSats refers to the class of spacecraft that conform to the CubeSat form-factor, and smallsats are the class of small spacecraft that includes CubeSats.

[2] In this article, the term interplanetary includes the Moon.

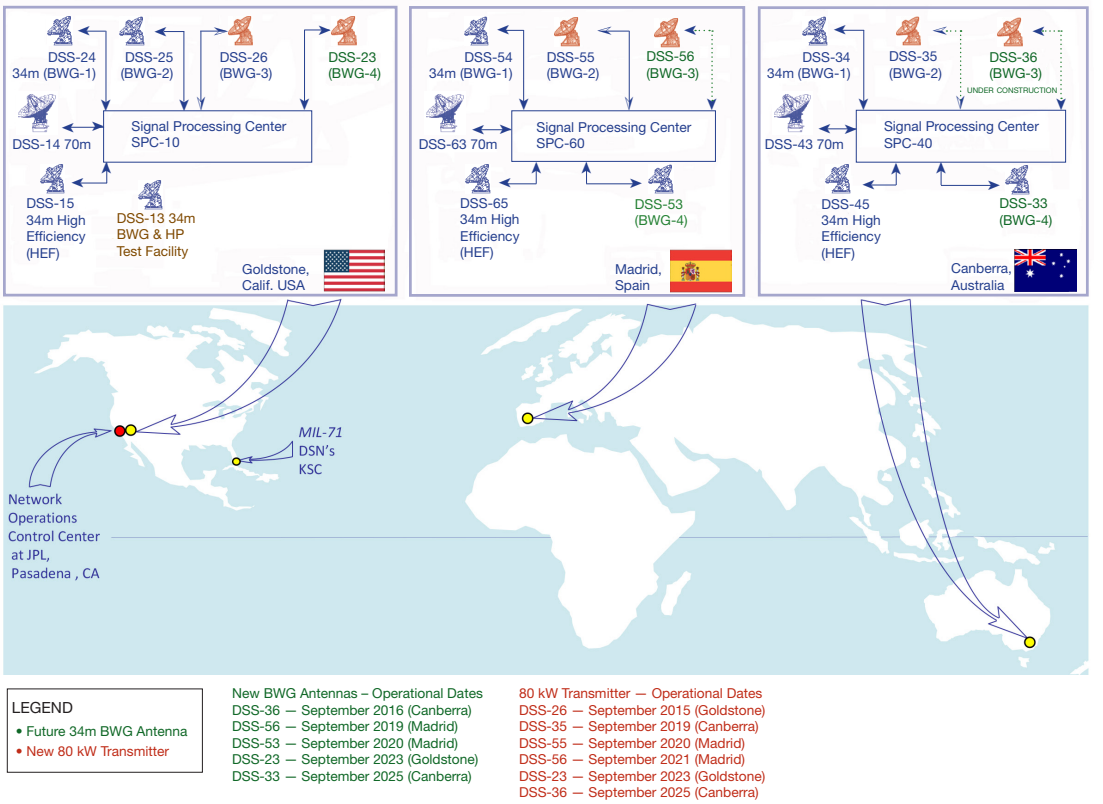

Figure 1. DSN Deep Space Station (DSS) resources as of December 11, 2014.

(1) *Link capabilities for data delivery*. Interplanetary CubeSats are constrained by the CubeSat form-factor, and are inherently limited in mass and power. Due to the sheer distance between the spacecraft and Earth, the data return must rely on the large aperture of the ground network infrastructure to compensate for the large space loss of interplanetary links.

(2) *Accurate spacecraft tracking for navigation state vectors determination*. The position and velocity of a CubeSat in LEO can be measured by small onboard Global Positioning Satellite (GPS) receivers, and be expressed in the form of North American Aerospace Defense Command (NORAD) two-line element data. An interplanetary spacecraft must rely on deep-space tracking techniques like ranging, Doppler, and very long baseline interferometry (VLBI) to derive precise information on range, angular, and velocity information.

(3) *Precision timing and frequency references to ensure accurate determination of spacecraft position and velocity*. Accurate timing and frequency references are needed for the processing of tracking data.

(4) *Accurate spacecraft and ground antenna pointing*. Ground and spacecraft directional antennas with higher gains have smaller beamwidths compared to their smaller-gain counterparts. In order to maintain communication with a spacecraft in X- or Ka-band, the antennas must track with precision. This imposes challenging requirements on the structural design, instrumentation, and control system of the ground and spacecraft communication systems.

(5) *Communications and tracking of multiple spacecraft.* In the era of interplanetary smallsats, there may be many occasions when the ground antenna will see multiple spacecraft in its beam. The ground network will need the capability to communicate with and to track multiple spacecraft simultaneously.

(6) *Spectrum coordination and utilization*. Another challenge resulting from multiple spacecraft in the vicinity of a target is spectrum availability. More effective and dynamic use of spectrum will be needed to support simultaneous communications and tracking of multiple spacecraft.

(7) *Deep-space spacecraft commanding*. Due to the long light time delay, real-time commanding of spacecraft and instruments is not always feasible. A non-real-time planning approach that generates command sequences that control science and engineering activities is generally needed. These command sequences have to be constraint-checked, verified, and validated to ensure safe operation of the spacecraft.

(8) *Cost*. In addition to the above technical challenges, interplanetary smallsat missions are much more cost-constrained compared to the traditional deep-space missions.

To mitigate the aforementioned challenges, we are coordinating the following efforts to evolve the smallsat flight communications system and the DSN architecture:

(1) *Development of, and enabling industry capability to supply, a deep-space CubeSat/smallsat radio product line*. Iris is a DSN-compatible navigation and communications transponder that, when used with the DSN, provides telemetry, commanding, Doppler, ranging, and delta differential one-way ranging (ΔDOR) services.

(2) *Development of high-gain antennas compatible with the CubeSat form-factor to enable deep-space communication with limited power consumption*. JPL is currently funding the development of at least three different types of antennas — deployable reflectors [1], deployable reflectarrays [2], and inflatable antennas [3] — with the goal of increasing the CubeSat equivalent isotropically radiated power (EIRP) with respect to the traditional LEO CubeSat missions, which are mostly equipped with monopole, dipole, and patch antennas.

(3) *Streamlining and upgrading the existing DSN capabilities*. This includes improving the antenna usage efficiency to better accommodate the smallsat missions, and reducing the testing and setup costs of using the DSN services as well as the Advanced Multi-Mission Operations System (AMMOS) services.

(4) *Development of new capabilities for simultaneous tracking of multiple spacecraft within an antenna beam*. The current operational multiple spacecraft per antenna (MSPA)[3] approach can support two spacecraft downlinks within an antenna beam. An upgrade to support four spacecraft downlinks (4-MSPA) is being evaluated to support the near-term needs. A low-cost opportunistic MSPA (OMSPA) approach that tracks multiple spacecraft downlinks is also being considered. There is also a study on an

[3] Sometimes MSPA is also known as multiple spacecraft per aperture.

enhanced version of OMSPA that provides simultaneous uplink, downlink, and two-way tracking services for multiple spacecraft, such as could be the case around the Moon or at Mars.

(5) *Coordination with non-DSN antenna facilities to support interplanetary smallsats*. It is likely that future growth of the interplanetary smallsat population would call for more antenna resources than the DSN alone can provide in some scenarios. The DSN plans to work with other academic and industrial ground antenna facility operators, and other national and international agencies to ensure compatibility, and to establish cross-support agreements so that it can request the use of these antennas in a timely manner. This would enable spacecraft operators, at their option, to move data and commands in a timely manner between their control/science centers and their interplanetary spacecraft, using ground aperture resources across the DSN and ground antenna facility operators affiliated with the DSN.

The rest of the article is organized as follows: Section II describes the likely mission characteristics of interplanetary smallsats and their communications and tracking needs. Section III details the development status of the CubeSat-compatible Iris radio and high-gain antennas. Section IV outlines the current efforts in streamlining and upgrading the existing DSN and Multi-mission Ground Systems and Services (MGSS) capabilities to support interplanetary smallsats. Section V discusses the new techniques for simultaneous tracking of multiple spacecraft within an antenna beam. Section VI provides the preliminary thoughts on DSN operational concepts, its interfaces, and coordination approaches with both non-DSN ground antennas and interplanetary smallsat missions. Section VII describes how smallsat missions can leverage on the multimission ground data system, and Section VIII discusses future trends and provides the concluding remarks.

II. Interplanetary Smallsat Mission Characteristics and Communications/Tracking Needs

After more than a decade of successful operations in LEO, opportunities for a new generation of smallsats are opening today. Smallsats are growing into real science missions and could support the space exploration program beyond LEO in the near future [4]. CubeSats and smallsats present unique advantages given by their nature, and these advantages have already been demonstrated in LEO:

- They are small, so they can benefit from multiple piggyback launches.
- They are cheap (compared to traditional satellites).
- They are suitable for distributed architecture — a mission can deploy many satellites instead of one big monolithic spacecraft.
- They have short development life cycles — fast development and deployment mean fast return of investment and science data.

These unique features are attractive for an increasing number of stakeholders, including universities, industries, and national space agencies.

In the United States, more than 40 CubeSats and small satellite missions have been developed, launched, and operated over the past years. All these missions were operated in LEO, between approximately 400 and 1000 km altitude. These LEO CubeSat missions are very different from interplanetary missions, as they face less severe challenges in propulsion, communication, and thermal control. Most of the LEO missions are developed as 1U, 2U, or 3U CubeSats.[4]

In the emerging era of interplanetary smallsats, most missions are designed to be 3U or 6U CubeSats as they need to accommodate sizable hardware such as a high-gain antenna and a propulsion tank for long-distance and long-duration space missions. Some interplanetary smallsat concepts currently in development are:

- Interplanetary Nano-Spacecraft Pathfinder in Relevant Environment (INSPIRE) [5]: to test a new science magnetometer and deep-space navigation and communications capabilities.
- Mars CubeSat One (MarCO): to demonstrate relay operation with the Interior Exploration using Seismic Investigations, Geodesy, and Heat Transport (InSight) spacecraft during its entry, descent, and landing at Mars.
- Lunar Flashlight [6]: to detect lunar surface ice at the lunar south pole using a solar sail as propulsion and a reflector.
- Near Earth Asteroid (NEA) Scout [7]: to characterize an asteroid using a solar sail as propulsion.
- BioSentinel [8]: to conduct life science studies relevant to human exploration.

Many other concepts are also under study in support of larger missions such as the proposed Europa Clipper and the potential new Discovery missions.

In addition, the availabilities of CubeSat slots on the future EM-1 launch (~2018) will potentially allow for additional CubeSat interplanetary missions to be developed and accommodated on that vehicle.

On the European side, the last European Union/European Space Agency (EU/ESA) Council Meeting at Ministerial Level (December 2, 2014) identified the Moon, Mars, and the asteroids as destinations of interest for future European space missions. Well-known “large” missions are already planned, such as ExoMars (2016 and 2018). A potential collaboration mission with NASA is the Asteroid Impact Mission to binary asteroid 65803 Didymos, which would include CubeSats, and would be flown in 2022 [9]. Under the Cosmic Vision program, ESA has already selected and/or approved a few space exploration missions that may be complemented by CubeSats and/or small satellites [10]. A few independent studies are in progress, such as missions of CubeSats to the Earth–Sun Lagrange points for space weather evaluation [11,12] and missions to the Mars system for science and human exploration support [13]. The European Student Moon Orbiter (ESMO) small mission to the Moon was designed in the last few years under an ESA program, but it was just abandoned because of a budget cut [14].

---

[4] CubeSats are often measured in units of U, which are 10 cm cubed or 1000 cc.

Section I outlines the key challenges in communications and tracking, primarily from a ground network perspective. There are other factors that directly or indirectly affect the communication and tracking capabilities from a mission and spacecraft perspective. They include:

- *Long mission duration*. Unlike many LEO CubeSat missions, which might last for hours or days, interplanetary smallsat missions are expected to last for years. This necessitates new capabilities, and imposes stringent reliability requirements on different spacecraft systems.
- *Harsh radiation environment*. Semiconductor electronic components onboard the spacecraft are susceptible to damage or malfunction as a result of the ionizing radiation of outer space. Extensive development and testing are required in the production of radiation-hardened versions of electronic components.
- *Power and thermal considerations*. An interplanetary smallsat needs renewable energy, thus requiring an advanced and well-regulated power system with solar panels and batteries. Also, the harsh thermal environment of space demands precise thermal control to ensure that the spacecraft electronics operate within their thermal limits.

In the next two subsections, we discuss the status of the avionics and communication systems of the LEO CubeSats, and discuss the challenges and trends in their migrations to support interplanetary missions.

A. Interplanetary Smallsat Spacecraft Avionics

CubeSat spacecraft avionics for LEO missions largely follow one of two architectures. The traditional design, based around a larger number of single-purpose microcontrollers, has been flown since the first CubeSat launch in 2003. More recent avionics designs use a single system-on-chip (SoC), a larger amount of external random-access memory (RAM), and few, if any, intermediate microcontrollers. Spacecraft employing both designs are still under active development and operation.

The traditional microcontroller architecture, as depicted in Figure 2, centers around interchangeable hardware modules connected by a common bus. For instance, the radio and payload are both logically and physically separate modules. The command and data handler (C&DH) serves as the communication hub to interconnect the modules and interface with some very basic avionics sensors (power, temperature, etc.). This design requires a control processor for each separate module. The C&DH has its own controller, as does the radio, payload, attitude determination and control system (ADCS), and any other moderately complex subsystem. Each of these controllers is single purpose and does not require much processing, leading to the use of a large number of low-power microcontrollers.

The SoC architecture moves away from the concept of hardware modularity and into the realm of software modularity. All the external devices are directly connected to a single SoC, per Figure 3. This represents a different set of trade-offs. The central processing unit (CPU) consumes more power, but is also orders of magnitude more powerful than the microcontrollers. The software that would have been distributed among the microcontrollers is now consolidated onto the SoC. These designs run a much more sophisticated operating system (like Linux) to facilitate code reuse and rapid development.

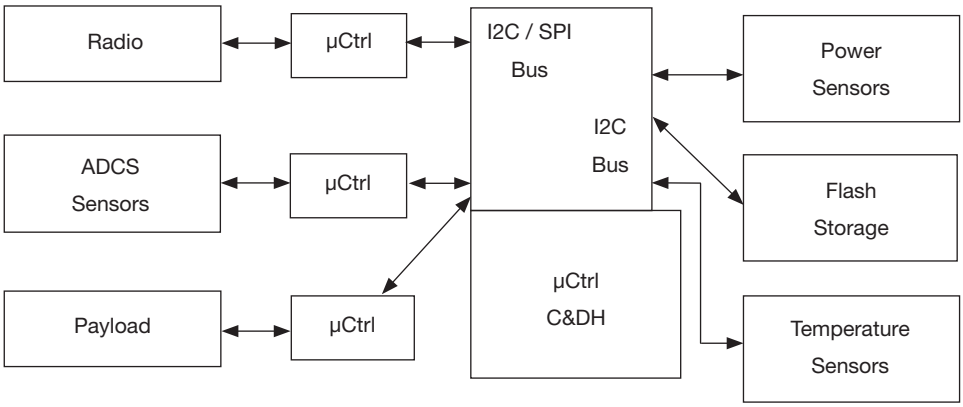

Figure 2. Generic functional diagram of microcontroller (µCtrl) architecture.

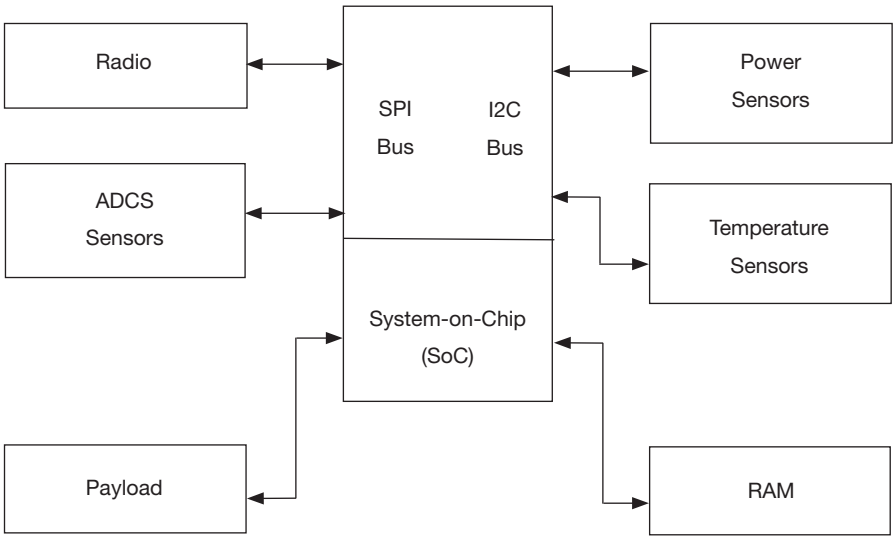

Figure 3. Generic functional diagram of a single-SoC architecture.

Both avionics architectures have the computing power necessary to use in DSN-compatible communication protocols. A new, or upgraded, communication microcontroller can be added into the traditional design to handle the extra communication overhead. The SoC designs typically have a substantial amount of unused processing power, some of which can easily handle additional communication tasks.

For deep-space missions, the larger challenge for avionics is radiation tolerance or hardening. Most existing satellites clear latchup events by performing a full system reboot. Most radiation hardening techniques tend to impose additional mass, power, and computational burdens to the electronic components or the avionics system as a whole.

B. Interplanetary Smallsat Communication System

There are major differences in the design of smallsat communication systems between LEO missions and interplanetary missions. In the case of LEO CubeSat missions, the design depends mostly on the commercial-off-the-shelf (COTS) products available. This is because CubeSat developments are typically low-cost and fast-paced, and they do not allow customized antennas and transceivers. As a result, most of the current LEO CubeSats communicate at UHF or S-band [15], the two bands for which many of the communication products have been designed. In terms of components, CubeSat communication systems are mostly single-string, without an amplifier, and with only one antenna and transceiver. Antennas are generally monopole, dipole, or patches [15]. The transceivers are almost all COTS products; they typically receive serial data and perform packetization, error checking, and retransmission [16]. Most of the protocols implemented are device-specific, and they generally require the use of specific receivers on the ground. In addition, these COTS devices do not generally possess any tracking or navigation functionalities. The ground receivers used for these missions are mostly operated in university stations or amateur radio stations, and the communication licenses used have mostly been amateur or experimental licenses.

The major differences in the design of smallsat communication systems between the LEO missions and the interplanetary missions are described in detail as follows:

- *Frequency*. While LEO CubeSats seem to mostly use UHF and S-band, interplanetary CubeSat designs seem mostly to use X-band [5–8]. There is also an interest in using Ka-band [2], as it can be seen in the development of Ka-band antennas [1] and transceivers. However, the use of Ka-band for CubeSats is still limited by the current pointing capabilities.
- *Transceiver*. Instead of purchasing COTS products, interplanetary CubeSat missions need to rely on more customized radios that also implement several features required for deep-space navigation: Doppler, ranging, and ΔDOR. This necessity has driven the development at JPL of the Iris radio [17], which is described in Section III of this article.
- *Antennas*. All the antennas are custom-developed. For low data rates, patches [5] are generally used. As distance and data rate needs increase, arrays of patches are implemented [7], as well as reflectarrays [2], deployable antennas [1], and inflatable antennas [3].
- *Ground support*. As described in later sections, interplanetary CubeSat missions need more complex services than most of the LEO missions. As a result, most of the interplanetary CubeSat mission designs are currently baselined on the use of the DSN.

In addition to the aforementioned differences, for an interplanetary smallsat spacecraft there can be stronger dependencies and additional constraints between its flight communication system and the other flight subsystems. The key dependencies are as follows:

- *Power system*. Smallsats, especially CubeSats, face limitations in the total onboard power that they can produce. This affects the communication system by limiting the power that can be allocated to the transceiver and by making it almost impossible for a CubeSat or smallsat to carry an amplifier. Another dependency between power and communication is that in many cases CubeSats and smallsats are equipped with deployable solar panels that can shade and/or limit the field of view of the antennas.

- *Pointing and control*. Almost all the directional antennas carried on CubeSats and smallsats do not have a gimbal and are body-mounted. As a result, the satellite control system needs to be able to adequately point the antenna, if required.

- *Navigation*. Interplanetary smallsats need frequent tracking measurements to allow precision navigation and pointing of spacecraft and ground antennas. As a result, the spacecraft radio needs to be equipped with additional capabilities to support navigation.

- *Instruments/payload*. There can be electromagnetic interference (EMI) between the communication system and the instruments. In addition, instruments may require a very high amount of data to be downloaded, which can influence the communication system design.

- *Structure*. Many CubeSats and smallsats have deployable solar panels and sometimes deployable instruments such as optical baffles. All these deployable components can obstruct the view for the antennas and create shading that can reduce the communication system performance.

- *Avionics*. The avionics characteristics (memory, processing power) can affect the amount of data transmitted versus what is processed onboard. In addition, many pc boards are packed together in a very closed space, and this can also generate undesired thermal effects and interferences that can affect the communication system.

III. Flight Communication Hardware Development — Iris Radio and High-Gain Antennas

This section discusses the ongoing development efforts of the Iris radio (Figure 4) and different kinds of high-gain antennas for CubeSats and smallsats.

A. Iris Radio Development

Development of the Iris, a CubeSat-compatible, DSN-compatible X-band transponder, began in 2013 in support of JPL's INSPIRE "First CubeSat to Deep Space" mission, and continues into several missions now in development, including Lunar Flashlight, NEA Scout, BioSentinel, and MarCO. Iris has many of the same features and capabilities as larger, more powerful JPL transponders such as the Universal Space Transponder (UST). Indeed UST and Iris share much of the same signal processing firmware and software. Iris provides DSN-compatible communications and navigation services in a volume (0.4 U) and mass (0.4 kg) compatible with the smallest CubeSats.

Iris, like the UST, features a slice architecture that separates signal processing from RF hardware. All receive bands supported share a common intermediate frequency (IF) and transmission is by digital modulation of a directly generated carrier. At this writing, Iris has RF slices for X-band transmit and receive (near-Earth and deep-space allocations supported) and UHF receive. Ka-band transmit and receive (deep-space band) and UHF transmit are in development, and S-band slices are planned. An optical communications slice is also under

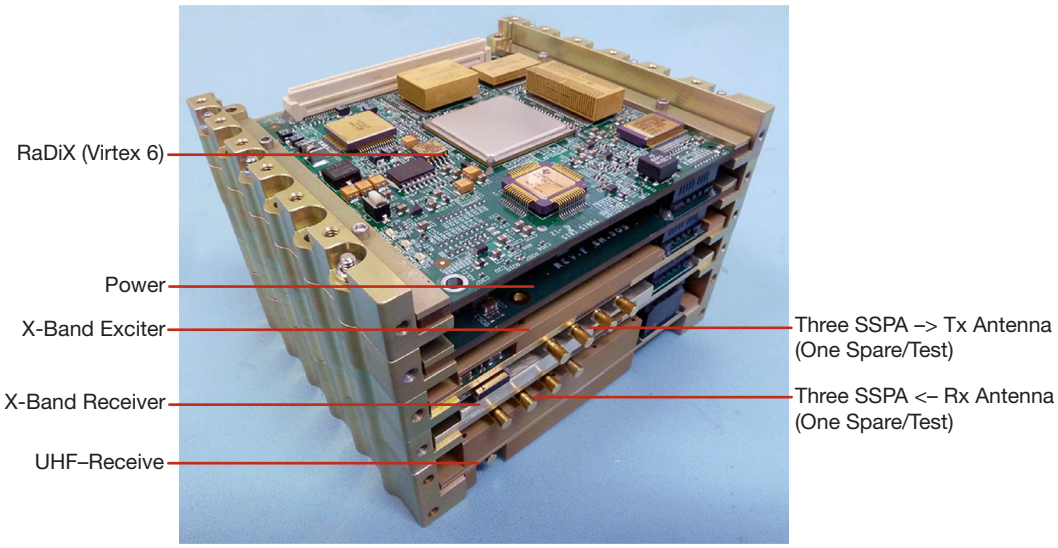

Figure 4. Iris Version 2 prototype stack.

consideration. These slices largely parallel the configurability and capabilities of the larger UST but in a CubeSat form-factor.

Iris software and firmware currently support DSN return-link schemes, including the Consultative Committee for Space Data Systems (CCSDS)–compatible Advanced Orbiting System (AOS) framing, turbo and convolutional coding, and binary phase-shift keying (BPSK) modulation of resulting bitstreams onto a subcarrier (25 kHz nominal, but other frequencies up to several hundred kilohertz are available), which is modulated onto the carrier. Direct carrier modulation is also supported. Suppressed and residual carrier modes are selected through control of the modulation index. Data rates from 62.5 to 256,000 bps are currently supported. The hardware and architecture could support higher rates of several megabits (Mb) per second or lower rates down to semaphores or tones of arbitrary length.

Similarly, on the forward link, Iris supports carrier detection and coherent tracking, subcarrier demodulation, BPSK demodulation, Reed–Solomon decoding (if desired), and CCSDS deframing of received signals at data rates from 62.5 to 8000 bps, with higher or lower rates possible. Most commands are passed through to the spacecraft command and data handling (C&DH) computer, but one, a special "FireCode" command, is interpreted by Iris and can be configured as a spacecraft reset or other discrete operation.

Proximity One protocol support for UHF (or other band) proximity communications is now in development. Other modulation and protocol schemes, such as Near Earth Network (NEN) compatibility, Manchester coding, quadrature shift or offset quadrature phase-shift keying, or higher level modulation, coding, or framing schemes, including higher-level protocols such as delay-tolerant networking, can easily be added to the Iris software and firmware as required. Many of these already exist in the UST/Iris libraries.

Iris features 32 Mb of storage, much of which can be used for transponder configuration or data buffering. The primary data interface is to C&DH using the serial peripheral interface standard.

Iris supports standard deep-space navigation types, including coherent Doppler, ranging, and ΔDOR tones. The coherent Doppler type is basic to Iris operation in that the return link carrier locked to an uplink carrier provides a very precise range rate signature. The current implementation of ranging is nonregenerative tone ranging, commonly used by DSN-supported missions, but regenerative tone ranging or pseudonoise ranging can also be easily supported.

Similar navigation types used in remote proximity situations, such as among multiple assets at Mars, are also supportable by Iris.

Due to the weak, sometimes extremely weak, signals involved in deep-space communication, all of these techniques are constant carrier in nature, meaning that Iris, when transponding, must operate its transmitter at 100 percent duty cycle for long periods of time. At X-band, 4 W of RF output corresponds to a DC power input of about 26 W. Ka-band puts out about 2 W for a similar input level. UHF transmission will require less power input. Iris is designed in such a way that the heat generated in this process is satisfactorily handled both through thermal conduction techniques and component mounting strategies. Both require some early interaction between the transponder provider and the spaceframe designer. The Iris receiver uses about 8 W of DC input. Power-saving measures such as duty cycling common in consumer devices (such as cellphones) may be inappropriate for deep-space control applications. Reduction in receive power is a design goal in active research at this time.

DSN compatibility for the first Iris version has been formally verified at DTF-21 in Monrovia, California. This transponder can operate on any channel in deep-space or near-Earth X-band (downlink 8.4–8.5 GHz). The coherent turnaround ratio on X-band is 880/749. Other standard or nonstandard ratios will be supported when other bands are used.

The Iris for INSPIRE was built with COTS parts for a nominal 90-day mission up to a few million kilometers from Earth. The Iris Version 2 supports three sets of transmit and receive antennas (Version 1 supported two each) that are software selectable to give the mission designer some spacecraft pointing flexibility. Iris can be used with antennas that vary from low-gain patches (a few decibels) to high-gain antennas (near 30 dB at X-band and 30–40 dB at Ka-band) that are under parallel development at JPL and elsewhere.

The Version 2 Iris transponder is intended for longer-duration missions, up to 2.5 years, in deep space through radiation hardening, with additional bands and the comprehensive thermal design discussed above. In parallel, a commercialization effort is in progress so that Iris Version 2 units can be produced at lower cost than the prototype or custom units built at JPL. Availability of commercially produced units is expected in 2016.

B. Development of CubeSat-Compatible High-Gain Antennas

To increase CubeSats' EIRP in support of interplanetary missions, JPL is funding multiple efforts to produce high-gain antennas for CubeSats and smallsats. Currently, three types of antennas are in development:

(1) *Deployable reflector*. Mostly designed for Ka-band [1], but potentially applicable at X-band, this antenna stores in 1.5 U of a CubeSat to deploy a 0.5-m reflector. The potential advantage of this antenna is in the deployment and folding rib mechanism, which should be able to provide the surface accuracy required for both X- and Ka-band. The challenge of this antenna is represented by the stowing efficiency, since it occupies 1.5 U for a 0.5-m reflector. The first prototype of this antenna should be ready by the end of fiscal year 2015 (FY15).

(2) *Reflectarrays*. These are made of a reflecting surface where the power reflected by each element is reradiated with a specific phase. Reflectarrays combine the advantages of arrays and reflectors, functioning like a reflector, but not occupying the same space as a deployable/inflatable reflector, and can be folded on the side of the spacecraft [2]. However, one limit of the reflectarray antenna is the scalability, since it is hard to scale it above a certain size. Designed for both X- and Ka-band, reflectarrays will be ready to be used on CubeSats starting in FY15.

(3) *Inflatable reflector*. Mostly designed for X-band, the inflatable antenna [3] is made of a Mylar balloon with one transparent side, one conductive side, and a patch antenna feed at the focus (see Figure 5). The inflation is passive and performed using sublimating powder. This antenna occupies 0.5 U of a CubeSat to produce a 1-m-diameter antenna, providing the highest stowing efficiency. As a result, this technology is very promising for its scalability to higher sizes and bigger gain with respect to deployables and reflectarrays. However, the limit of this technology is in reliability, sensitivity to micrometeoroid impacts, and thermal/environmental variation. This antenna is in an earlier phase of development compared to the other two technologies and it will probably be ready by the end of FY16.

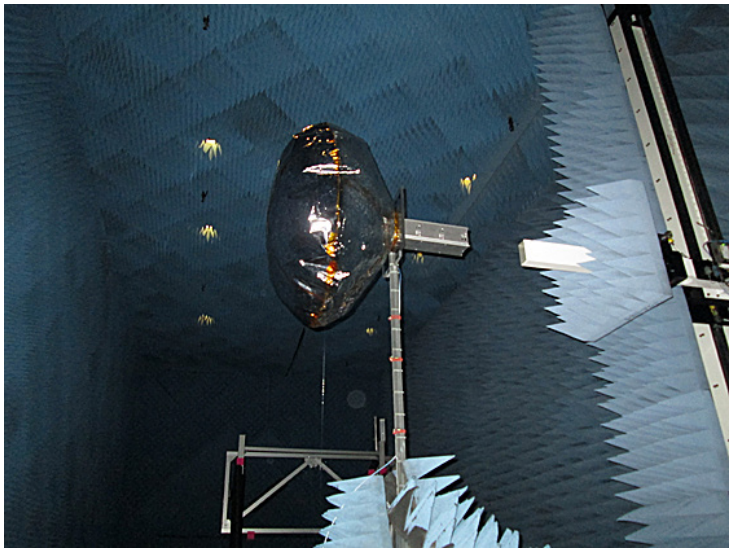

Figure 5. Inflatable antenna tests in the anechoic chamber at JPL [3].

IV. Streamlining and Upgrading Existing DSN Capabilities and Processes

To accommodate the communications and tracking needs of interplanetary smallsats, the DSN has been investigating different approaches to streamlining and updating the existing ground network capabilities, services, and processes. The next two subsections discuss the current status of the DSN resource allocation process and the DSN service management capabilities, and they outline the migration plan to support interplanetary smallsat missions.

A. DSN Resource Allocation Process

One important consideration is the availability of DSN resources to accommodate the interplanetary smallsat missions. The DSN currently makes available 13 antennas at its three Deep Space Communications Complexes located around the world. These 13 antennas are in high demand by the roughly 40 missions they support. Due to the contending mission requests, almost all missions receive less tracking time than they request. In a typical week, approximately 300 hr of antenna time out of 1,500 requested goes unfulfilled due to contention with more than one mission requesting the same DSN resource. The current DSN scheduling process requires a large amount of time and effort to negotiate the resolution of conflicts in antenna time. The addition of multiple interplanetary CubeSats/smallsats is anticipated to exacerbate this contention.

The current DSN scheduling process is managed by the DSN's Scheduling Process Office (SPO) located at JPL in Pasadena, California. The SPO provides the scheduling tools and end-to-end scheduling process for the scheduling community. The scheduling community comprises three scheduling teams that provide scheduling services to several dozen of the missions that use DSN antennas, plus a handful of individual missions that do their own scheduling. Together, the project/mission schedulers perform peer-to-peer negotiation for tracking time on the DSN antennas under the supervision of the SPO. The SPO and schedulers also receive assistance from DSN systems engineering and JPL navigation teams who provide support products and analysis. Time allocated for each user is based on the user's requirements, spacecraft visibility, and the outcome of the negotiation process. The DSN does not allocate time based on priorities. However, there is an escalation process to resolve issues if a user is unsatisfied with the outcome of the negotiation process at lower levels of negotiation.

There are three scheduling tools used in the current DSN scheduling process:

(1) Telecommunications and Mission Operations Directorate (TMOD)[5] Integrated Ground Resource Allocation System (TIGRAS)/Mission and Assets Database (MADB) for long-range forecasting and special studies.

(2) Service Scheduling Software (SSS) for mid-range scheduling.

(3) TIGRAS for near real-time scheduling and launch contingency planning.

Plans are underway to integrate all three tools into a single tool for end-to-end scheduling needs.

[5] TMOD is now the JPL Interplanetary Network Directorate (IND).

The future of the DSN scheduling process is currently under review and may comprise a hybrid approach of a peer-to-peer negotiation and a priority-based scheduling system. The priority system will be multidimensional, based on mission phase, mission events, spacecraft health and safety, and any other data necessary to meet user needs while maximizing the use of DSN assets. It is recognized that the DSN will be required to accommodate a more diverse mission set. Today, most DSN users have planning cycles greater than 8 weeks that adapt well to DSN scheduling. Future missions that have shorter planning cycles are less dependent on firm tracking schedules well in advance. The challenge for the DSN will be to meet all customers' needs within the constraints imposed by DSN resource availability and operational rules.

B. DSN Ground Support Capabilities and Cost

The DSN, with its 13 antennas around the globe, has been providing high-quality communications and tracking services for the commanding, telemetry, tracking, and monitoring of the health and safety of deep-space spacecraft. Interplanetary smallsat missions are typically highly cost-constrained, and might not be able to afford the traditional high-end communications and tracking services provided by the DSN.

The major cost factors in using the DSN include the DSN aperture fee (includes DSN RF compatibility testing), and custom data and support services.

DSN Aperture Fee

The aperture fee is used for full-cost accounting purposes and is not an expense to a NASA-sponsored mission. For a non-NASA-sponsored mission, the base 2010 cost is $1057/hr for a 34-m antenna (inflation adjusted for the appropriate year, with an hour average of station setup and teardown time for each contact, and weighted by number of contacts per week). It is based on the specific antenna(s) used, and the number and duration of tracking passes. The 70-m hourly rate is four times that of a 34-m hourly rate.

When subscribing to DSN Services, there are standard services that are included in the DSN aperture fee.

Included are engineering support, system engineering, advanced mission planning, emergency mission operations center, RF compatibility testing, mission system test, spectrum and frequency management, and spacecraft search.

Also included in the aperture fee are the tracking support services: command services, telemetry services, relay service, beacon tone, validated radiometric data, ΔDOR, calibration and modeling services, platform calibration data, and media calibration data.

The customer can pick and choose the DSN standard service. DSN standard data services are independent of each other. DSN standard data services are multimission in nature and generally require table adaptations. No development is required on the part of the DSN beyond configuration, parameter updates, mission service validations, and interface testing. Development on the customer's side is limited to using the standard service and meeting its interfaces.

These standard services are listed in the published DSN Service Catalog, which is available on the DSN Commitments website.[6]

Custom Data and Support Services Not Included in the Aperture Fee

While the DSN encourages use of standard services, some customers request tailored services, or higher performance than that guaranteed by the standard data services. These tailored services can be provided when the standard services must be heavily customized in order to meet the customer's operational needs, or when the nature of the customer's endeavor requires functions that are not supported by the standard services. Missions pay for the additional cost for custom/tailored services. All nonstandard service requests and costs are negotiated with the DSN on a case-by-case basis.

DSN RF Compatibility Testing

The DSN requests and strongly encourages prelaunch RF compatibility with every individual spacecraft using the DSN. This testing is a means to eliminate postlaunch anomalies and expensive troubleshooting. Testing validates the spacecraft RF subsystem and its telecommunications capabilities as they interact with DSN RF and data systems. RF compatibility testing should be planned for ~1 year prior to launch, but may take place no later than 6 months prior to launch. If the mission does not do a DSN RF compatibility test, the mission must sign a waiver with the DSN. This waiver releases the DSN from any liability. Note: this RF compatibility testing is included in the nominal DSN aperture fee.

Notional DSN Cost Saving Measures for Smallsats

To reduce DSN costs for the interplanetary smallsat missions, the JPL Interplanetary Network Directorate (IND) is considering a number of variations on the MSPA schemes mentioned in Section I, and discussed at length in Section V. With current MSPA capabilities, two spacecraft sharing an antenna can qualify for a reduced aperture fee. These spacecraft can be CubeSats, large orbiters, or anything in between. The disadvantages of the current MSPA services are that (1) only two spacecraft can share antennas for downlink, and (2) only one spacecraft at a time can receive a DSN uplink for commanding, two-way ranging, and Doppler. Enhancement options to upgrade MSPA service to mitigate these shortcomings are discussed in Section V.

The DSN is also considering CubeSat tracking packages. These package deals of one price (examples below) include all of the standard services included in the DSN aperture fee:

- Value Package of 50 hr total tracking (for one spacecraft or multiple spacecraft).
- Economy Package of 100 hr total tracking (for one spacecraft).
- Supersize Package of 100 hr plus total (pro-rated for hours after 100 hr, for one or multiple spacecraft).

An additional CubeSat cost saving idea under consideration by DSN is a reduced prelaunch testing when a CubeSat mission consists of several spacecraft. The DSN cost savings approach would be to configure for all the CubeSat spacecraft for the mission during pre-

[6] The DSN Service Catalog is publicly available at http://deepspace.jpl.nasa.gov/advmiss.

launch phase. The DSN would then only test one of the CubeSat spacecraft fully — i.e., RF compatibility testing, ground data system (GDS) testing. The DSN would then only perform a subset of tests on the subsequent CubeSat spacecraft within that mission.

V. New Techniques for Simultaneous Tracking of Multiple Spacecraft in an Antenna Beam

As alluded to near the beginning of this article, the relatively low cost of developing smallsats and launching them as secondary payloads on trajectories that take them beyond geosynchronous orbit is leading to a veritable "explosion" of deep-space smallsat mission concepts. Each upcoming Space Launch System (SLS) launch, alone, has the capability to deploy as many as 11 6-U CubeSats from its interim cryogenic propulsion stage. Because these smallsats tend to be extremely mass-, power-, and volume-constrained, most of the telecom burden needs to be assumed by large antennas on the ground. But, such antennas are not in great abundance. In the case of the DSN, for instance, only 13 antennas are currently available to support roughly 35 spacecraft. But with just three SLS launches, including nothing else, the number of spacecraft needing support could just about double. And, because of their deployment as secondary payloads, many of these smallsats may require initial support at roughly the same time in the same portion of the sky. Hence, the DSN has been working to develop low-cost techniques to enable its antennas to support significantly more spacecraft simultaneously.

One technique that has been employed for over a decade is referred to as MSPA. In this technique, spacecraft that will be in view of the same ground antenna at the same time can schedule to share it for their downlink (see Figure 6). The number that can share the antenna tends to be constrained by the number of deep-space receivers affiliated with it. Currently, the DSN is only equipped with two such receivers per antenna, limiting MSPA's applicability to only two spacecraft at a time. In this configuration, the uplink for spacecraft commanding and ranging measurement is shared between the two spacecraft via time multiplexing since the uplink equipment only supports one signal at a time. The downlinks that enable telemetry data return, as well as the return of ranging and Doppler radiometric data, are simultaneously supported with a different set of receiving equipment. The operation of the equipment, including the configuration setup at the start of the pass and the switching of the uplink in mid-pass between spacecraft, is automated and driven by the tracking schedule.

In anticipation of the tracking demand from interplanetary smallsats, the DSN has recently been investigating different approaches to increase the number of simultaneous spacecraft that MSPA can support, and to enhance the tracking services for individual spacecraft. Three approaches are being considered: 4-MSPA and two types of OMSPA.

4-MSPA

4-MSPA is the extension of the current MSPA technique of tracking two spacecraft to four. This requires adding two additional receivers to the tracking antenna, removing some legacy technical constraints in the equipment scheduling information processing, and upgrading the software for automated configuration. That would allow, for example, the uplink

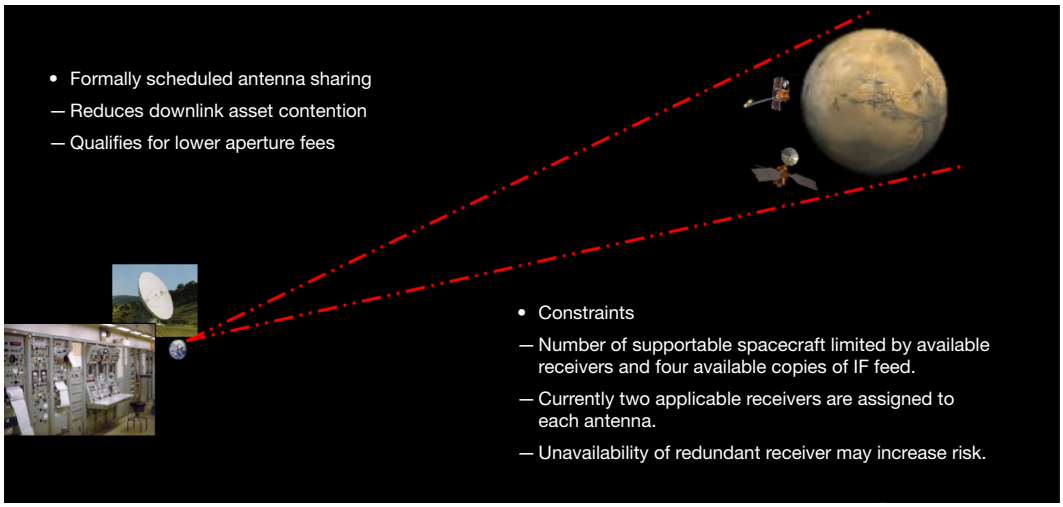

Figure 6. Traditional MSPA.

swapping done multiple times within a pass. Possible further improvement would be to increase the uplink capability by allowing for simultaneous generation and transmission of multiple uplinks — one for each spacecraft. This would increase the amount of two-way radiometric data and provide flexibility in mission operations with the sequence planning and command uplink. This approach is synergistic to the enhanced OMSPA, which will be discussed in the latter part of this article.

OMSPA

In the OMSPA concept, a wideband recorder, rather than additional receivers, is added to the ground antenna and run 24/7, recording at IF whatever the ground antenna sees within the frequency bands of interest (Figure 7) [18]. While traditional links involving the antenna's deep-space receiver still get scheduled, smallsats and other spacecraft that will be within the same beam of the antenna can opportunistically transmit open loop, with their signals getting captured on the recorder. Everything received through the antenna

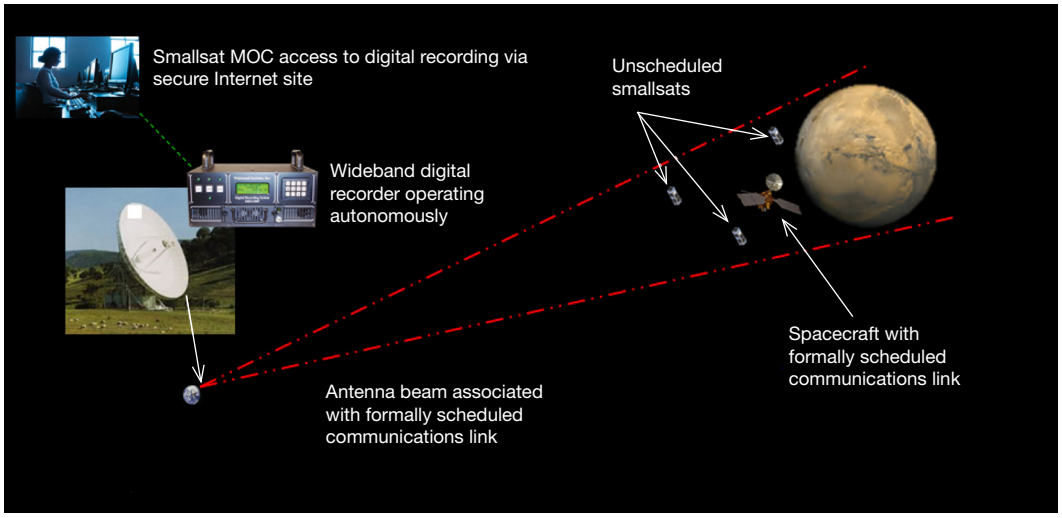

Figure 7. Overall diagram of OMSPA.

beam is digitally recorded. Smallsats transmit open loop when in a host spacecraft's beam. The appropriate time and frequency domain of the recording can then be retrieved and the appropriate signal processing performed to recover the data. The DSN delivers the digitized signals to the various smallsat Mission Operations Centers (MOCs), and each MOC retrieves relevant portions of the digital recording for subsequent demodulation and decoding (or they use a service that does it for them).

Assuming adherence to proper frequency assignments, there is virtually no limit to the number of spacecraft that can be simultaneously accommodated within the same beam. And, adding one recorder per antenna and running multiple instantiations[7] of software receivers to demodulate and decode the appropriate portions of the recordings is likely to be substantially cheaper than trying to add numerous strings of traditional receiving and telemetry processing equipment.

Given OMSPA's potential, the DSN conducted a proof-of-concept demonstration during the last few months of FY14 [19]. In this demonstration, Mars Odyssey was considered the "smallsat" and Mars Reconnaissance Orbiter was considered the "host" spacecraft. Tools were created to look at the "smallsat's" trajectory relative to that of the "host" spacecraft, identify the unocculted beam intercept opportunities and their durations, compare them to the "host" spacecraft's downlink schedule, and convert all of this information into a set of opportunities when the "smallsat" could transmit while in the "host" spacecraft's ground antenna beam. Existing VLBI science receivers (VSRs) were used to record what the "host" spacecraft's ground antenna was seeing during these opportunities. The recordings were then played back to a secure server, and the appropriate time and frequency portion of each recording was retrieved for further processing. This processing involved applying a software tool developed to detect the "smallsat's" signal in the recording, demodulate it, and decode it. Validation of the recovered data was then accomplished by comparing the transfer frames obtained through OMSPA with those recovered via Mars Odyssey's formally scheduled downlink. In each 1-hr demonstration run, all of the above steps were accomplished within a 1-day timeframe, with at least 99.95 percent of the transfer frames being successfully recovered.

Given the success of the proof-of-concept demonstration, the DSN is considering implementing OMSPA as an alternative downlink frame service at some point in the future. Figure 8 summarizes the operation of the proposed OMSPA. In this implementation, dedicated digital recorders would capture what each antenna is looking at on a 24/7 basis. An OMSPA user would be able to query the service planning system, determine relative to its trajectory which antenna beams might provide optimal open-loop transmission opportunities, and schedule for software demodulation and decoding of the appropriate antenna's recording at the appropriate time(s). The DSN would then ship the recovered transfer frames to the user's MOC in much the same way that recovered data are shipped for a traditionally scheduled downlink. Because the DSN would locate its instantiations of software demodulators and decoders right at each DSCC's signal processing center, the recording playback time would be minimal, enabling a relatively low-latency service.

---

[7] An instantiation is the creation of a real instance or particular realization of an abstraction or template such as a class of objects or a computer process.

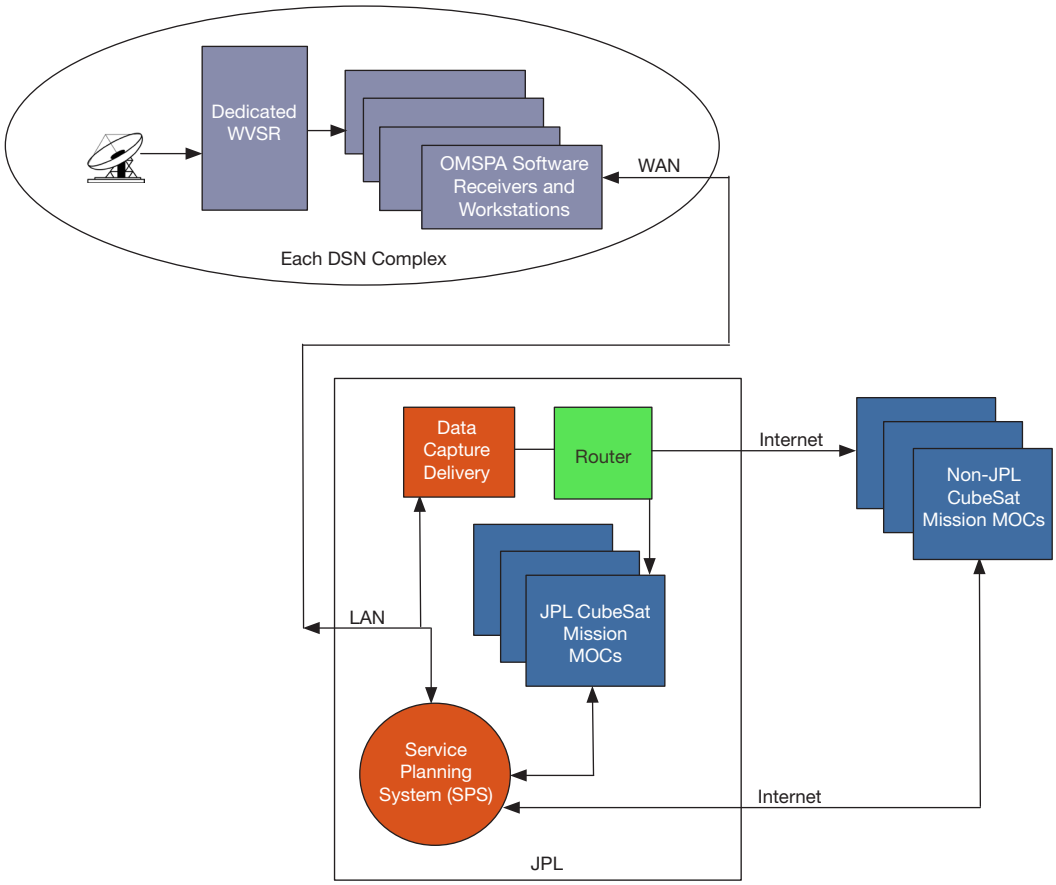

Figure 8. Flowchart for opportunistic "frame service" version of MSPA. (WVSR = wideband VLBI science receiver; WAN = wide-area network.)

Preparatory to the above implementation of OMSPA, however, further work is needed to increase the speed and automation of the signal processing software, extend the software's capability to the detection and recovery of Doppler and ranging data, and expand the software's demodulation and decoding capabilities to encompass higher data rate, bandwidth-efficient modulation schemes and associated coding. In so doing, OMSPA's applicability could be extended from smallsats to nearly all RF-using missions with shared-beam opportunities. Hence, even during those times when multiple smallsats may need to be tracked independently, OMSPA might prove helpful by allowing routine downlink from other mission customers at a single locale, such as Mars, to be temporarily handled with a single antenna — thereby freeing up other antennas to use on the smallsats needing individual tracking.

For smallsat missions wishing to make use of the DSN's large antennas without any formal scheduling or associated aperture fees, the DSN is considering making an experimental, "self-service" version of OMSPA available via the DSN's Radio Science Return Signal Recording Service. In this "self-service" version of OMSPA, the digital recording capabilities of existing radio science receivers would be used to record what various antennas are "seeing" (Figure 9). The recordings would be made available to the smallsat missions via a secure internet site. After retrieving the time and band-relevant portions of these recordings, the

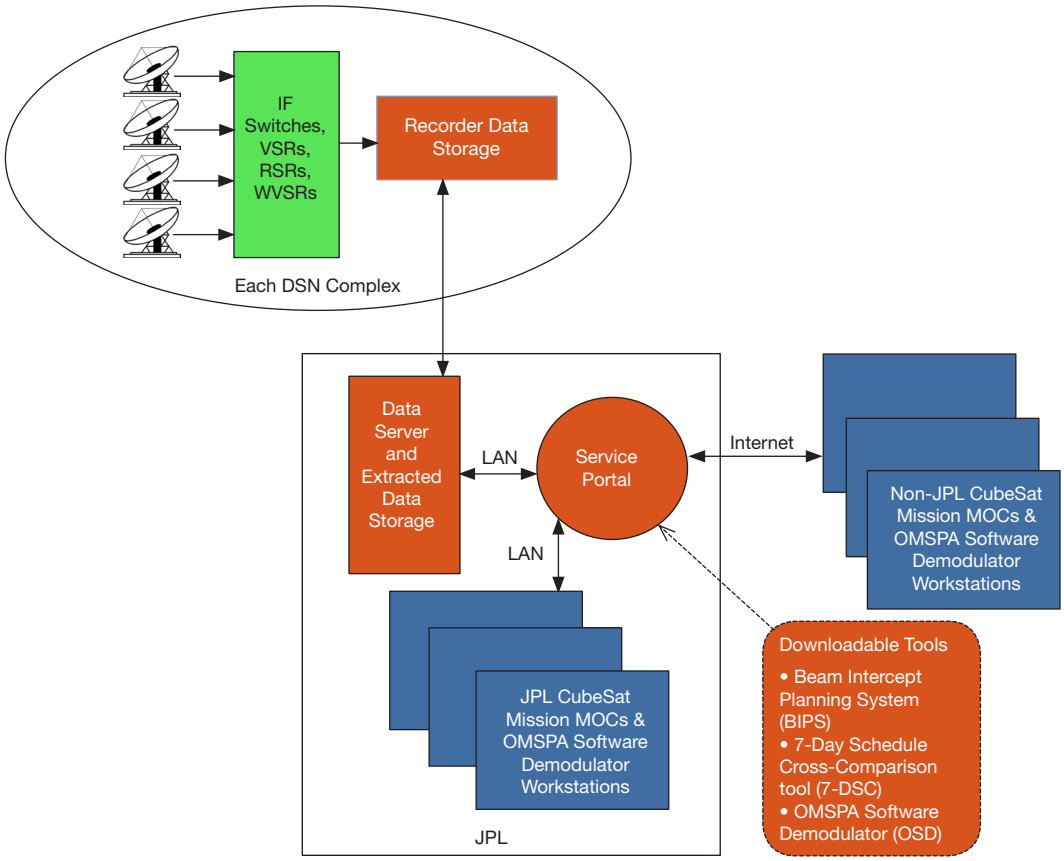

Figure 9. Flowchart for opportunistic "self-service" version of MSPA. (RSR = radio science receiver; LAN = local-area network.)

smallsat MOCs could then demodulate and decode the signals to recover their data, or employ a service that does it for them. To facilitate smallsat use of this "self-service" approach, the DSN would make tools available similar to the ones it used to perform the proof-of-concept demonstration. Smallsat missions could choose to use these tools or employ their own. In either case, the DSN would not be in a position to guarantee data recovery, and the data latency would be on the order of hours to days depending upon the user MOC's signal processing capabilities and its bandwidth for retrieving the recordings. Conversely, use of the antennas would not have to be formally scheduled in the same way as traditional DSN tracking and would not incur the associated aperture fees.

Enhanced OMSPA

In recent years, numerous mission proposals that involve multiple small spacecraft have been funded. For some of these missions, the multiple spacecraft are expected to remain within the same beamwidth of any single DSN antenna. Using OMSPA, the DSN can receive the downlink signal from multiple spacecraft and it can also transmit a single uplink using the same ground antenna.

For navigating these multiple small spacecraft, the navigation team will rely on the range rate measurement as a simple and cost-effective technique. The range rate is normally obtained by measuring the frequency shift of the carrier signal transmitted to the spacecraft

from a ground antenna and coherently retransmitted back by the spacecraft. This tracking system is referred to as a two-way Doppler link, and because the uplink signal relies on a very good DSN timing reference compared to the reference onboard the spacecraft, a two-way Doppler measurement is more accurate than a one-way measurement for producing the navigation solutions. So, even though OMSPA provides an efficient method to receive multiple downlink signals with a single ground antenna at a considerably low operational cost, the current OMSPA capabilities require that the spacecraft share their time on the uplink. This limits the amount and availability of the two-way coherent data required for navigation.

As an enhancement to the current OMSPA, we propose a technique that relies on a single antenna for multiple uplink and downlink operations (SAMUDO) and does not necessitate changes to the DSN hardware and software for both uplink and downlink systems. The SAMUDO technique will enable the capability to track up to five spacecraft simultaneously from a single Earth station transmitting five Earth-to-space frequency uplink tones and receiving five space-to-Earth downlinks. This proposed approach employs the same fixed turnaround frequency ratio onboard the spacecraft transponders and a specific modulation index on the DSN side to produce the desired number of frequency tones with the optimized carrier suppression.

All the DSN uplink elements needed for supporting the SAMUDO technique are shown in Figure 10. The exciter comprises three subassemblies: synthesizer, phase modulator, and upconverter. The carrier frequency is synthesized within the exciter from a very stable frequency reference provided by the frequency and timing subsystem (FTS). The subcarrier is then modulated onto the carrier by the phase modulator. This modulated signal is then converted to the desired uplink frequency before the transmitter amplifies it to the power level necessary to reach the spacecraft.

All the elements in Figure 10 are controlled by the uplink processor assembly (UPA), which provides all control and monitor functions, including the interface to the mission user. The command modulation generator (CMG) enables the generation of the various modulations used by DSN. The CMG is configured by the UPA based on the command service table that provides the user with the capability to specify the modulation index value and the subcarrier frequency.

This approach is a low-cost method for enabling multiple and simultaneous two-way Doppler measurements, but it does not support simultaneous uplink commanding.

The modulation index is established by applying a variable-amplitude voltage to the phase modulator. Current DSN capability allows for a modulation index range from 0.1 radians to 1.52 radians. For the purpose of the SAMUDO technique, and as represented by the theoretical Bessel function in Figure 11, a modulation index of 1.4347 radians produced five distinct frequency tones with desirable power levels at the carrier and two sets of subcarriers: one set with a suppression of 5.23 dB and the second with a suppression of 13.3 dB. In addition to the modulation index, the frequency value of the subcarrier can also be specified in the service table. This value represents the frequency separation between the carrier and the subcarrier. The DSN currently supports 250 kHz as the maximum subcarrier frequency.

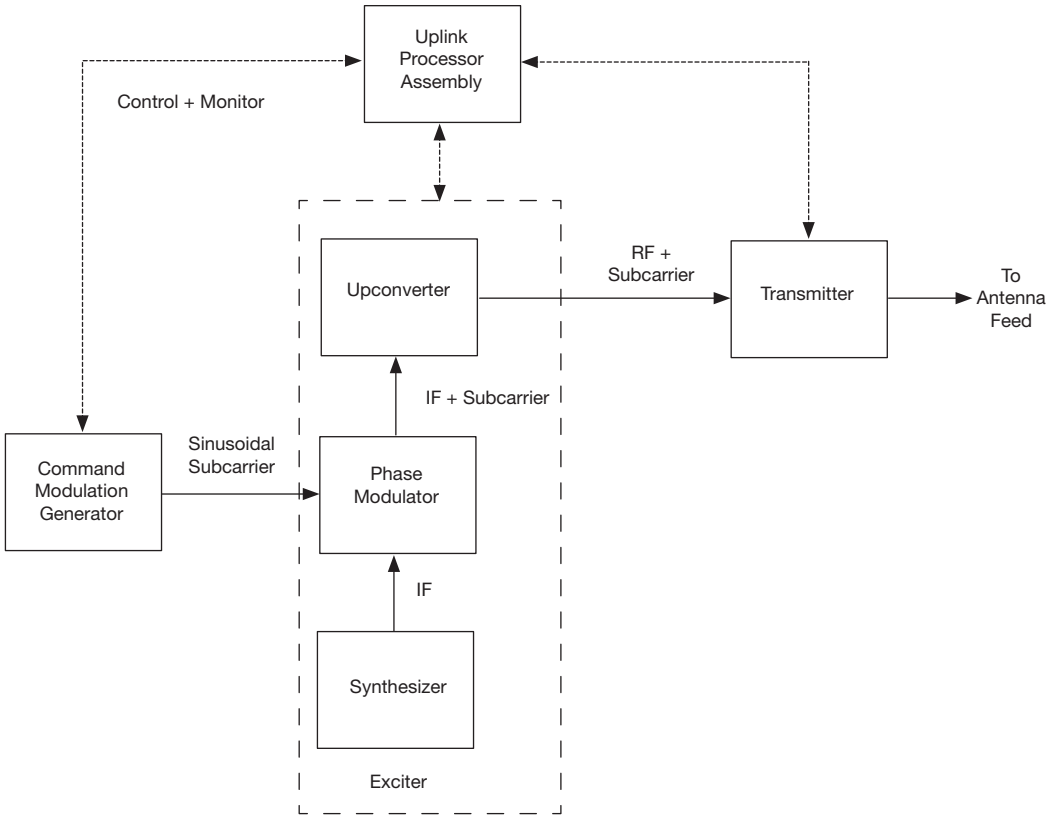

Figure 10. DSN uplink diagram.

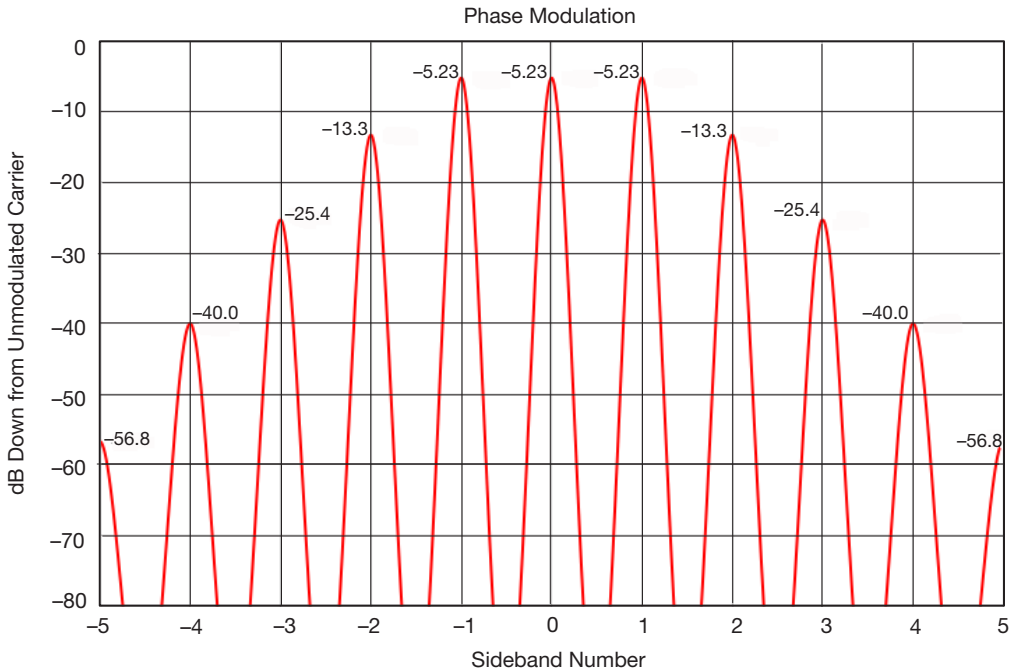

Figure 11. Theoretical Bessel function with modulation index = 1.4347 radians.

For the SAMUDO approach to work, careful attention must also be placed on the frequency assignment for each spacecraft in order to optimize the available bandwidth and minimize possible interferences from the adjacent spacecraft. Each spacecraft needs to be assigned one of the five generated frequencies (best lock frequency). The maximum downlink telemetry rate from each spacecraft is directly correlated to the subcarrier frequency, which defines the maximum bandwidth allocated to each spacecraft.

VI. DSN Operation and Its Interfaces with Non-DSN Antenna Facilities and Missions

Based on our current understanding of the mission set of interplanetary smallsats, this section discusses the preliminary thoughts on the DSN operations concept and its interfaces to support this class of missions.

A. Spectrum Coordination for Interplanetary Smallsats

Smallsats pose several challenges for spectrum management. The quick development cycle and opportunistic launches of smallsats often do not allow for the typical frequency selection and spectrum coordination process for NASA interplanetary missions, which can take several years to complete. This process involves a frequency selection study, RF interference analysis, hardware spectrum measurements, domestic and international frequency coordination, and frequency filings with the appropriate spectrum regulatory agencies. This contrasts with the short development cycle of smallsats, which may last only a year. This creates difficulty for spectrum managers when doing international frequency coordination and obtaining frequency licenses for smallsats. Furthermore, smallsats often request a frequency assignment before the launch date and trajectory have been determined in order to facilitate procurement of transmitter hardware. However, the interference analysis needed to select the appropriate frequency channel requires knowledge of the period of transmissions and the trajectory of the spacecraft. It is not unusual to have to perform multiple frequency analyses for smallsats as their mission parameters change.

The frequency licensing process for all satellites (including smallsats) operated by United States government agencies such as NASA is controlled by the National Telecommunications and Information Administration (NTIA). The Federal Communications Commission (FCC) oversees licenses for nongovernment domestic-operated satellites, including those run by universities or commercial entities. The International Telecommunication Union (ITU) is responsible for making spectrum allocations and establishing rules for spectrum use. For NASA missions, an international filing with the ITU is also often necessary. Depending on the number and severity of issues that arise during the process, licensing and coordination can take longer than the entire smallsat development cycle. Efforts are underway in the ITU and NTIA/FCC to shorten the processing time for smallsat filings. Proper licensing is required before a satellite can be launched, so smallsat projects are encouraged to work with their spectrum managers as early in their development as possible to begin the frequency channel selection and license application process.

Use of the spectrum is governed by national and international regulations and rules. NASA deep-space smallsats need to adhere to the NTIA's Table of Frequency Allocations. Space research frequency bands available for deep-space interplanetary smallsat missions include the 2290–2300 MHz and 8400–8450 MHz frequency bands for telemetry downlinks, and the 2110–2120 MHz and 7145–7190 MHz bands for command uplinks. However, these bands are shared by many other interplanetary missions, in particular the 8400–8450 MHz band around Mars, and care must be taken during the frequency selection process for new missions to avoid RF interference. Figure 12 shows an example of the congestion and the spectral bandwidth overlap between current and upcoming Mars missions in the 8400–8450 MHz band.

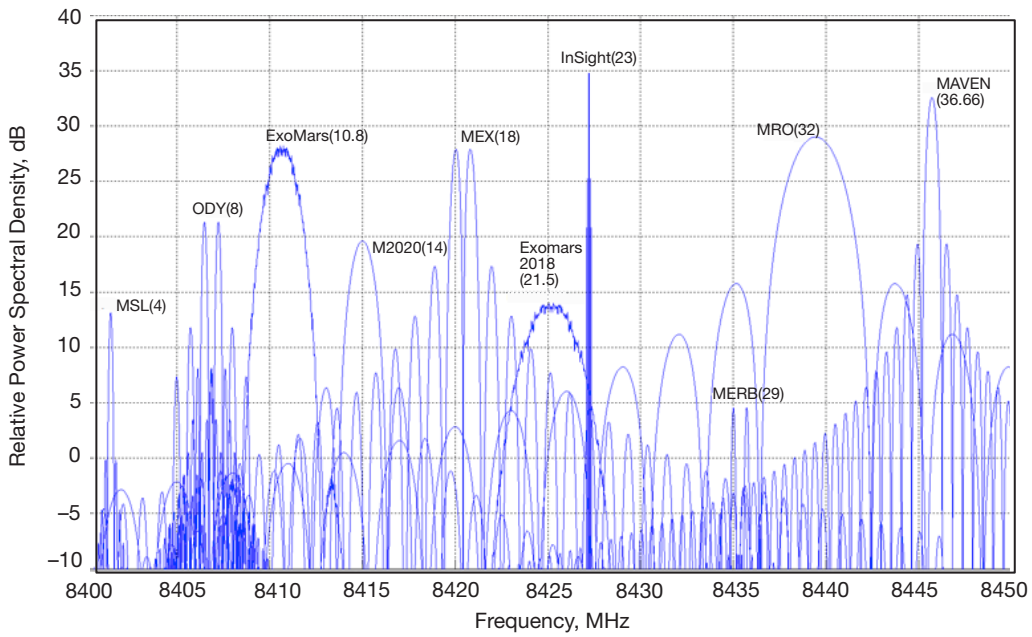

Figure 12. Spectrum congestion in the deep-space 8400–8450 MHz frequency band.

Due to power and size constraints, smallsats typically have an EIRP that is much lower than other interplanetary satellites. This renders smallsats especially susceptible to RF interference from higher-EIRP satellites when they are both in orbit around the same interplanetary body. There are several steps that can be taken from a spectrum management perspective to minimize RF interference for smallsats. The first is appropriate spectrum allocation and channel selection for both smallsats and other interplanetary satellites. In congested bands, the lower-EIRP and lower-data-rate missions should be placed on one end of the frequency band as much as possible, and the higher-EIRP and higher-bandwidth satellites on the other end of the band. This avoids the scenario where a high-EIRP probe is placed on an adjacent frequency channel to a low-EIRP probe, which could result in harmful interference to the lower-EIRP probe if the two satellites are spatially aligned.

Use of different antenna polarizations, bandwidth-efficient modulations, and transmitter filters are onboard hardware solutions recommended for reducing RF interference and simplifying frequency coordination. This should be done whenever practical, but it is recog-

nized that these solutions are not always possible for smallsats due to hardware and cost constraints. Deep-space missions requiring large data rates and telemetry bandwidths are recommended to utilize the Ka-band deep-space allocation (31800–32300 MHz), which has much less congestion.

If interference cannot be avoided through these methods, spectral analysis tools can be used to predict the time periods and expected signal-to-noise ratio (SNR) degradation of the RF interference. With this information, informed decisions can be made as to whether the interference is acceptable, and if not, then what operational workarounds are needed. Operational workarounds can include a temporary reduction in data rate for the interfering satellite, or scheduling alternate passes to avoid interference.

B. DSN Compatibility and Interfaces

The DSN provides standard services for spacecraft telemetry, tracking data (ranging and Doppler), ground station monitor data, and command services. In addition, there are other services that the DSN can provide. These services are listed in the published DSN Service Catalog.[8] This service catalog describes the details of the different services as well as the DSN capabilities.

Most of the DSN standard services conform to the CCSDS standards. The CCSDS has published a series of documents on standards for spacecraft and ground communications. These standards cover modulation schemes, telemetry, and command formats as well as interfaces with ground stations.[9]

For each of these services, there are interface options on how the services are provided to the customer (see Figure 14 on page 28). The interface is dependent on the service type, requirements, and affiliations of customers, i.e., JPL missions or non-JPL missions. Generally speaking, the suite of interfaces for JPL missions is different from the suite of interfaces for non-JPL missions [16]. The exception is service management, for which the interface is the same for both cases [15]. Figure 13 summarizes the flow of requests and scheduling.

Service management of the DSN is used for scheduling the DSN resources (tracking antennas) used for supporting the mission. It includes providing the DSN mission general scheduling requirements such as minimum and desired tracking hours and contacts per week. The Spacecraft Ephemeris, usually captured in CCSDS-recommended format of a Spacecraft and Target Ephemeris Kernel (SPK) file, is also required by the DSN. This SPK file is used by the DSN for generating view periods when a certain ground station is in view of the spacecraft. The mission will provide a project scheduler representative who will interface with the DSN regarding specific requests for tracking stations and tracking passes that would be needed by the mission. This scheduler will also help negotiate requests and resolve conflicts as appropriate.

---

[8] The DSN Service Catalog is publicly available on the DSN Commitments Office website at http://deepspace.jpl.nasa.gov/advmiss.

[9] See http://public.ccsds.org/.

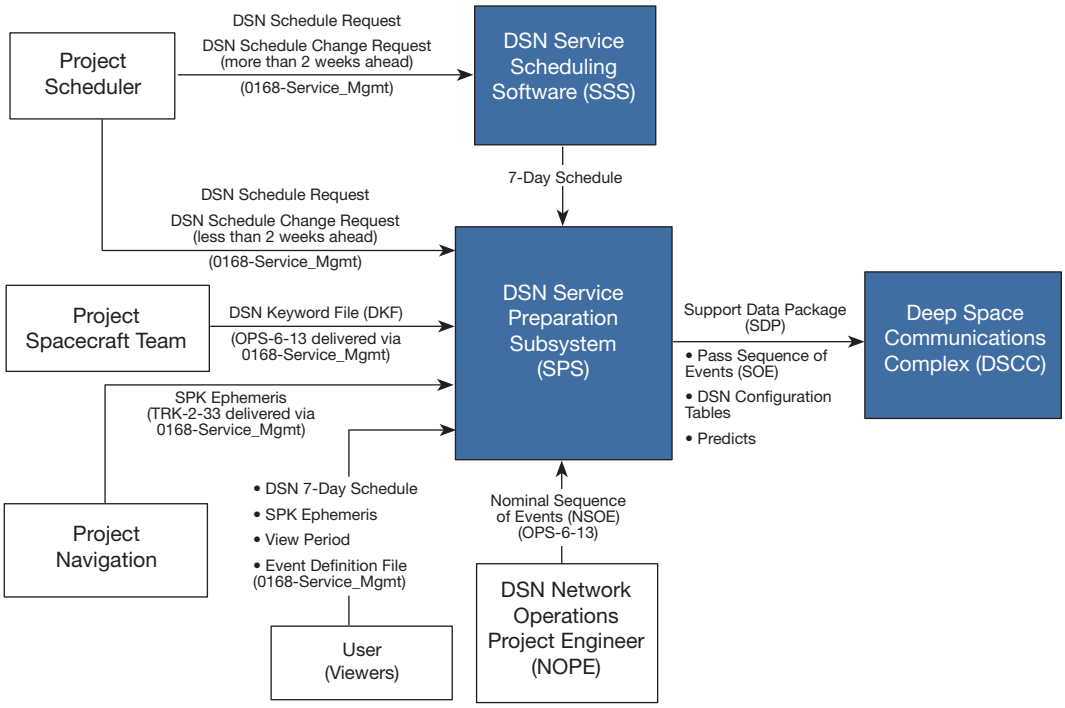

Figure 13. DSN service management flow chart.

In addition, the mission will also provide a sequence of spacecraft events and network configurations for each of the requested DSN tracking supports. Tracking hours are limited by practical limits of total user demands and internal engineering and maintenance activities. The DSN and the deep-space user community work together to produce conflict-free schedules several weeks out. Advance DSN conflict-free schedules are important because deep-space missions operate primarily under sequence control (i.e., in response to a highly accurate model of predicted events). Late changes to the schedule are disruptive (and costly) to the user community in part because the schedule is typically packed very tightly. Demand scheduling of the DSN, in response to unplanned or ad hoc mission events, is not within the DSN operational concept. In addition to supporting the tracking of spacecraft, the DSN also serves the radio astronomy, radio science, and space radar communities with special products unique to those disciplines. These activities are also in competition with requests for spacecraft tracking supports to obtain the limited DSN resources. It should be noted that the DSN currently does not use a priority scheme in scheduling missions. It is up to the missions to work and resolve conflicts within the DSN schedule.

Figure 14 summarizes the overall flow of data in the DSN, including the geographical divisions. DSN tracking stations are located at Goldstone, California; near Canberra, Australia; and near Madrid, Spain. All data and interfaces from the tracking stations go to the JPL Deep Space Operations Center (DSOC) located at Pasadena, California. Missions use the DSOC no matter whether their interfaces with DSN are internal or external.

JPL missions that use navigation and tracking data services usually use specialized DSN equipment for processing and data conditioning prior to delivery. Telemetry and command services also employ customized equipment and processing, and the equipment is located

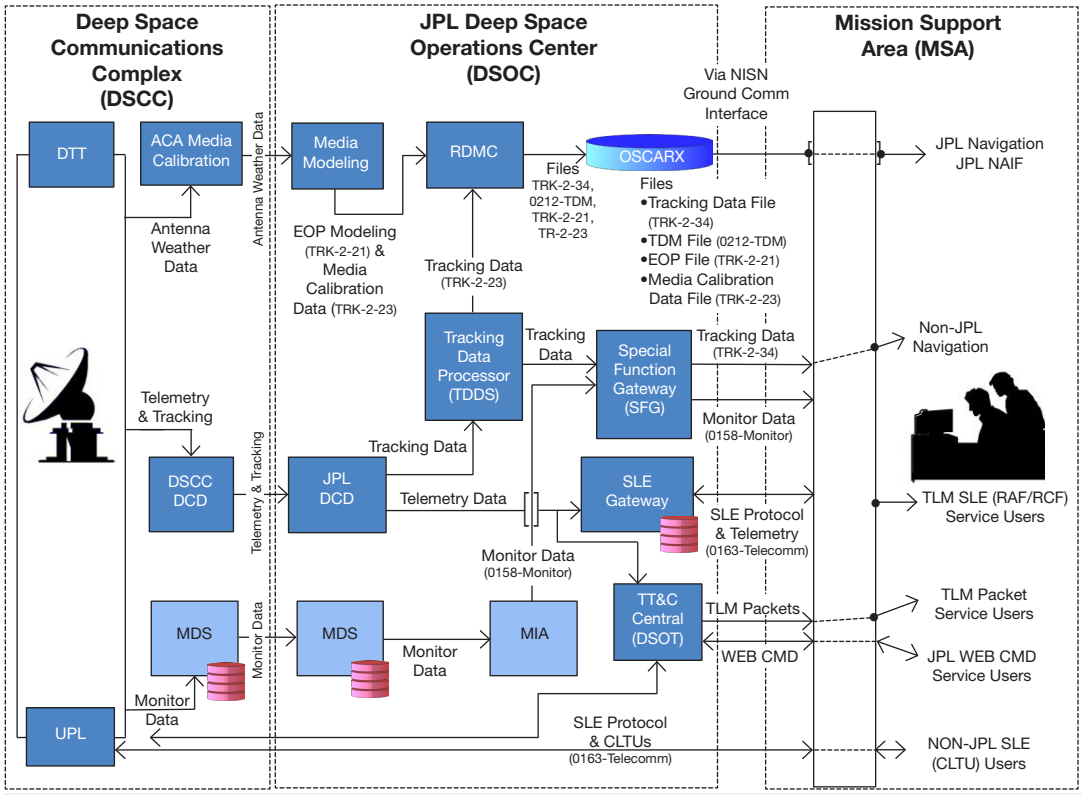

ACA = antenna controller assembly
ASIST = Advanced System for I&T and Spaceflight
CLTU = command link transmission unit
DCD = data capture and delivery subsystem
DSCC = Deep Space Communications Complex
DSOC = Deep Space Operations Center
DTT = downlink tracking and telemetry
EOP = Earth orientation parameter
FEDS = ASIST Front-End Data System
MDS = monitor data server
MIA = monitor interface assembly
NAIF = Navigation and Ancillary Information Facility
RCF = return channel frames
RMDC = radiometric data conditioning
SFG = special function gateway
SLE = Space Link Extension Protocol
TLM = telemetry data
UPL = DSN uplink subsystem

Figure 14. DSN internal and external interfaces flow chart.

at the DSOC. Thus, these missions have customized interfaces with the DSN that are not CCSDS-compliant. It should be noted that JPL internal missions could also use CCSDS interfaces as an option, but most do not.

For non-JPL missions, the DSN offers the use of the CCSDS Space Link Extension (SLE) [20,21] for both the forward link (command to the spacecraft) and return link (telemetry from the spacecraft). All telemetry data from the DSN tracking stations are sent to the DSOC. The mission then interfaces to the DSOC (the SLE telemetry server) for SLE frame service. Note that if a mission desires to retrieve telemetry files via File Transfer Protocol or similar protocol, it still interfaces with DSOC, and not with the DSN tracking station. For the SLE forward link (command), the mission still passively goes through DSOC, but actually interfaces directly to the DSN tracking station's command system (command server). For tracking data services (i.e., Doppler and range data), the external mission also receives the data from DSOC via the DSN tracking station. For tracking data, the DSN offers external missions a DSN tracking interface (known as TRK-2-34) that is streamed in real time during the support. The DSN also offers the CCSDS tracking data message (TDM) from DSOC.

Using CCSDS standard interfaces can be the most cost-effective way for CubeSat missions. The CCSDS interfaces (SLE and TDM) that the DSN offers for telemetry, tracking, and command services have also been adopted by the Japan Aerospace Exploration Agency (JAXA) and the European Space Agency (ESA), and cross-support agreements are in place. In the near future, Goddard Space Flight Center's NEN tracking facilities will also support the CCSDS standard interfaces. Also, university antennas, such as the antenna at Morehead State University in Kentucky, are considering supporting the CCSDS standard interfaces. By adhering to these CCSDS standards, a CubeSat mission can be compatible with a large number of ground stations around the globe, thus allowing quick and easy access to ground communications and tracking support during nominal and off-nominal operations.

C. Cross-Support with University Stations — Case Study: Morehead State University

The number of CubeSat missions planned for beyond LEO poses a challenge for mission operations and for DSN ground operations. A potential solution lies in the implementation of high-gain ground stations operated by universities and other astronomical research centers. One example is the 21-m Space Tracking Antenna operated by the Space Science Center at Morehead State University (MSU). The antenna (Figure 15) was brought online in 2006 and provides telemetry, tracking, and command (TT&C) services for a wide variety of space missions, but it is particularly well suited for supporting smallsats. The 21-m is a multipurpose instrument, serving also as a radio telescope for astronomical research and as an experimental station for communications systems development. The instrument is a unique educational tool that provides an active laboratory for students to have hands-on learning experiences with the intricacies of satellite telecommunications and radio astronomy. The 21-m antenna supports undergraduate research in astrophysics, satellite telecommunications, RF, electrical engineering, and software development. From its inception, it was anticipated that the 21-m antenna would provide telemetry, command, and tracking services for small, low-power satellites performing research in the lunar vicinity, at Earth–Sun Lagrange points, at Near Earth Asteroids, and potentially out to Mars at low data rates. It was not envisioned that these small satellites would be CubeSats since the form factor was evolving simultaneously with the planning and design of the 21-m antenna. The MSU team received significant guidance from NASA's NEN (Ground Network at the time) and from Mike Moore Engineering Enterprises, who assisted in developing performance criteria and requirements anticipated to support spacecraft operations into the 21st century. One of the primary uses of the 21-m system is to provide ground operations services for small satellite missions operated by MSU and its partners. The students and staff of MSU have gained valuable experience in space operations and the 21-m antenna's performance has been vetted through these activities. Dynamical and mechanical properties of the antenna can be found in [22,23].

A block diagram of the standard 21-m feed configuration is shown in Figure 16. Feeds typically consist of a horn, coupler, orthomode transducer (OMT), low-noise amplifier (LNA), and noise control source or test inject with heater that is encased in insulation. Downconversions are accomplished using frequency-specific, interchangeable tuners. RF performance characteristics are provided in [24,25].

Figure 15. The MSU 21-m antenna (Lat: 38° 11' 30.773 N, Long: 83° 26' 19.948 W).

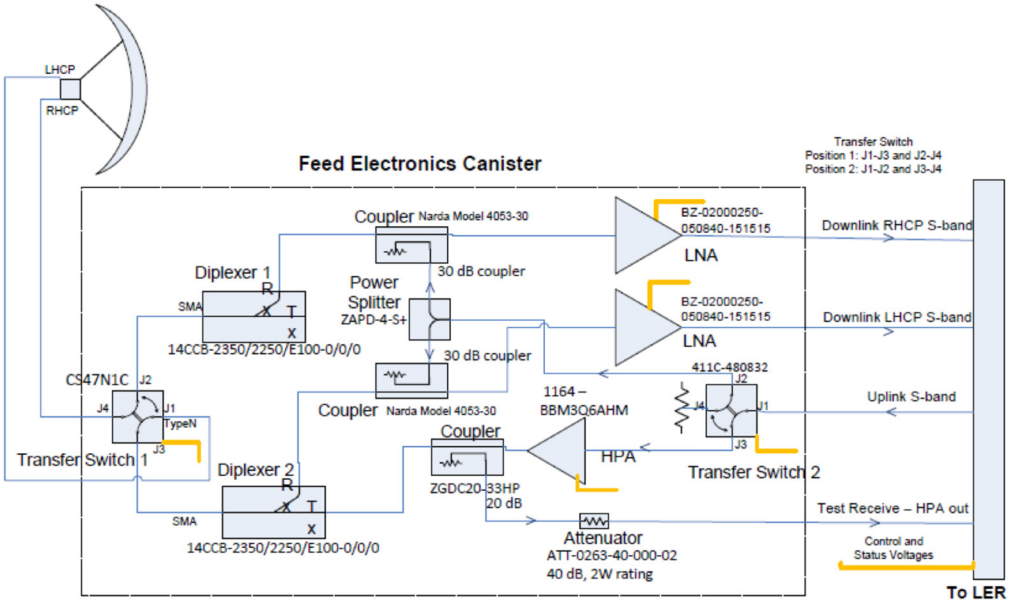

Figure 16. Standard configuration of the RF systems of the MSU 21-m antenna.

The 21-m system incorporates back-end (digital front-end) technologies that include complete automation and control systems (for remote autonomous operation of the 21-m), software-defined radio/digital signal processor (DSP) front-end (including an Amergint SoftFEP 200 Telemetry receiver, an RT Logic T400 modem, a National Instrument digitizer for experimental purposes, a version of the NASA NEN operating software [HWCNTRL], and a high-performance S-band feed). The 21-m is currently an effective system at S-band, X-band, and Ku-band. The system also supports remote operation by off-site operators, and it is capable of supporting the SLE data formatting and processing protocol. Figure 17 shows the back-end architecture for the MSU 21-m antenna.

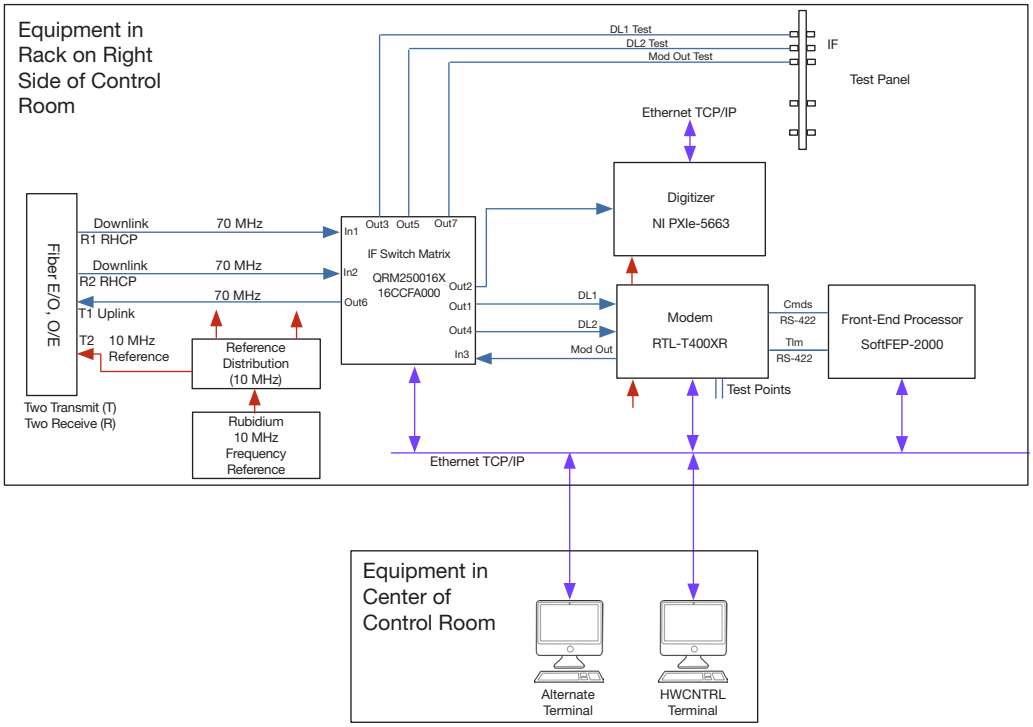

Figure 17. MSU 21-m antenna telemetry and signal processing architecture.

The MSU 21-m antenna currently has the capacity to track satellites in LEO, the geostationary arc, and the lunar vicinity (with high transmission power), owing to a combination of antenna gain and relatively low-noise feed systems. The system currently operates at UHF, L-, S-, C-, X-, and Ku-band. The 21-m has extremely good surface (0.0166" root-mean-square [RMS]) and tracking accuracies (0.005 deg RMS at Ku-band), and excellent pointing (≤ 0.01 deg RMS). The 21-m has been employed in a growing portfolio of satellite missions, serving as the primary high-bandwidth ground station for Kentucky Space LLC's[10] KySat-2, Planet Lab's Dove-2 and Dove-3 satellites, and MSU's Cosmic X-Ray Background NanoSatellite (CXBN). It has also served as a secondary ground station for the University of Roma GAUSS Group's EduSat and UniSat-5 missions. The system has been employed in the testing and calibration of the NASA Lunar Reconnaissance Orbiter synthetic aperture radar (mini-SAR) at X- and S-band. A number of future missions anticipate using the 21-m, in-

[10] LLC stands for Limited Liability Company.

cluding CXBN-2, UniSat-6, KySat-3, and future Planet Labs Dove satellites. The instrument is primarily operated by undergraduate students who work in the associated laboratories. They gain hands-on training in space communications systems and techniques, turning the university's laboratories into educational environments for workforce training. While the 21-m has been successfully used to service (uplink commands and downlink data) small satellite LEO missions, the potential exists to evolve the system into an instrument capable of supporting deep-space small satellite missions. When combined with the 21-m aperture area gain, and improved performance characteristics owing to planned upgrades (cryogenic low-noise amplifiers, improved back-end digital signal processing, and improved time synchronization), the antenna is poised to support low-power small satellite missions beyond LEO.

Next we discuss the roadmap to upgrade the MSU antenna to provide communications and tracking services to interplanetary smallsats. The process is nontrivial, and involves increasing a variety of performance parameters of the existing systems, including RF performance, tracking precision, automation and remote operation, and time synchronization. Additionally, new features will need to be added in order to support deep-space missions, such as SLE compliance, CCSDS data protocol standards compatibility, deep-space ranging and tracking, security, configuration management, and high-power uplink.

As a first step in the process of providing communications infrastructure for deep-space small spacecraft missions, an experiment is underway to determine the feasibility of adding additional nodes to the DSN, particularly non-NASA assets of >20 m aperture that are in place and operated by universities and astronomical research facilities. The experiment involves developing a prototype system by evolving an existing university antenna, the MSU 21-m antenna, into a DSN-compatible asset. An initial study (supported by NASA Human Exploration and Operations Mission Directorate [HEOMD] and led by JPL) involves identifying required upgrades and capabilities that must be implemented to bring the MSU antenna up to DSN compatibility in the deep-space X-band regime. The study phase underway incorporates the following steps:

(1) Assess the current state of the hardware and software systems.

(2) Perform initial evaluation of requirements to service baseline missions.

(3) Evaluate data rates that could be supported from lunar, L-1, and Mars distances with upgraded performance.

(4) Acquire and implement critical hardware components for evaluation (single-channel, compact, cryogenic low-noise-figure LNA, waveguide switches, and associated power supplies).

(5) Modify the existing MSU X-band feed to incorporate critical components.

(6) Implement an X-band feed (prototype feed) with a single upgraded LNA.

(7) Undertake empirical measurements of a single-channel, compact, cryogenic, low-noise-figure LNA.

(8) Make empirical measurements of antenna gain-to-noise temperature (G/T) with the prototype feed.

Empirical measurements of G/T will allow derivation of critical values (gain and system temperature) that can be fed into numerical models to determine data rates that are achievable at beyond-LEO distances. Regions of particular interest to the interplanetary CubeSat community are the Moon, Earth–Sun Lagrange points, Earth–Moon Lagrange points, NEAs, and Mars. If the initial study to determine the feasibility of extending the DSN to include additional assets is successful, a multiphase approach will be taken to evolve the MSU 21-m antenna to DSN standards. The strategy involves a series of steps taken over a three-year period to assure that the MSU 21-m antenna achieves critical performance benchmarks. These steps include (1) overall systems engineering, (2) designing and implementing system upgrades, (3) conducting a series of downlink experiments, and (4) conducting a series of navigation experiments. Each step is described briefly below.

Systems Engineering

The complexities of the tasks of upgrading a non-NASA asset, implementing appropriate data handling protocols, implementing new software, and training staff and students in these processes, techniques, and protocol are significant. As such, a systems engineering approach is planned. This strategy involves the JPL and MSU teams jointly performing uplink and downlink analyses, including (1) Investigating thermal issues associated with simultaneous uplink and downlink and evaluating whether or not to use a separate antenna for uplink at greater distances, such as beyond the Moon, (2) developing a procedure for radiating from the 21-m antenna, and (3) defining the target uplink capability (range of missions to support in the future) and the associated design and cost.

The systems approach will also result in a definition of security upgrades needed to support NASA missions and be compatible with DSN operations. This aspect of the program will include evaluation of (1) the video monitoring capability needed for safety, (2) any additional need for interlocks to prevent injuries, (3) International Traffic in Arms Regulations (ITAR) considerations for equipment JPL would potentially provide to MSU, (4) a Technology Assistance Agreement (TAA) for any students or staff working on development activities as appropriate, and (5) upgrades to site security to prevent unauthorized access. The systems engineering strategy will also involve devising an approach to mission support as it relates to scheduling of DSN and MSU spacecraft tracking passes. Finally, the overall systems strategy will result in defining upgrades needed to support deep-space navigation and conduct experiments to jointly evaluate the performance of the experimental node. This definition will include (1) a study to define upgrades and capabilities that need to be implemented, (2) evaluation of ranging delay in the MSU antenna system, and (3) evaluation of the feasibility and benefits of adding the ΔDOR capability. The anticipated 21-m system upgrades are preliminary and are described at a high level below.

System Upgrades

A major challenge of the project is related to implementing capabilities related to data handling and antenna control. The results of systems engineering studies and analysis will determine requirements for data handling protocols and systems and will result in a strategy for implementation of these protocols and systems. It is anticipated that the software systems required will include (1) IT security upgrades, (2) software interfaces and supporting software needed to support the FY15 downlink experiments, (3) SLE implementation,

(4) other software upgrades to support NASA deep-space communication and navigation CCSDS standards, (5) software interface to DSN scheduling, and (6) antenna control system upgrades needed for compatibility.

A preliminary analysis has been undertaken of hardware systems that are required. The initial results of this analysis indicate that several critical hardware systems will need to be implemented, including:

(1) Two single-channel, compact, cryogenic, low-noise-figure LNAs.

(2) A noise calibration system.

(3) A time standard.

(4) Time synchronization supporting hardware.

(5) Antenna control unit upgrade.

Downlink Experiments

Once the required hardware and software systems are implemented, a series of increasingly sophisticated experiments will be conducted to assess the MSU 21-m performance capabilities and compatibility with the DSN. These assessments will include downlink and navigation experiments.

To facilitate a series of downlink experiments, JPL will provide government-furnished equipment (GFE) to process downlink data in the same manner as the DSN. This approach eliminates much of the compatibility testing (and associated costs) that would be required for a new implementation to support downlink processing. A student task would define the interface. The GFE will consist of a downlink channel that could be controlled locally or remotely at JPL. After verification of the functionality of the GFE, the team will conduct a series of downlink experiments tracking one or more NASA spacecraft and evaluate performance results.

Navigation Experiments

After successful conclusion of the series of downlink experiments, the JPL and MSU team will conduct a series of experiments to measure performance of the MSU antenna as it relates to navigation analysis. Tests will be defined to evaluate capabilities as defined in the systems engineering task but are likely to include a range processing experiment with an evaluation of ranging delay. The navigation experiments will vet important performance aspects of the system related to DSN compatibility, including timing synchronization, transmit capabilities, and ranging techniques. The navigation experiments will provide insight into the viability of the concept of adding university-based ground stations to the DSN. The three-year timeline for implementation was chosen to allow adequate time for hardware and software development, to assess performance on benchmark activities, and to train university personnel and students. The timeline was also selected to implement an additional vetted DSN node in time for the 2018 launch of the NASA EM-1 mission that will include as many as 11 6U CubeSats headed to lunar destinations and beyond.

D. Potential ESA Antennas for Interplanetary Smallsat Missions

ESA has a strong heritage in the development and operation of near-Earth and interplanetary missions for advances in science and space exploration. ESA currently operates several satellites in near-Earth, including XMM-Newton, Integral, Cluster, Gaia, two planetary orbiters around Venus and Mars, and the cometary mission Rosetta. Several missions are in preparation. These include ExoMars 2016/2018 and BepiColombo (to be launched in the timeframe 2016–2018 and to reach Mars and Mercury, respectively), the L2 mission Euclid to be launched in 2020, and the Jupiter Icy Moons Explorer (JUICE, to be launched in 2022 and reaching the Jupiter system in 2030). In addition to the above core missions, ESA is also active in demonstration of novel operational concepts and onboard technologies, as it was for the past lunar mission Small Missions for Advanced Research in Technology (SMART), and will be for the OPS-SAT CubeSat mission, which will allow experimentation with onboard and ground software for the operational needs of future missions at ESA [26].

The ground segment of all ESA missions is designed and operated by the ESA Operations Centre (ESOC) located in Darmstadt, Germany, and it allows mission operations during all phases, from listen-in during system validation tests at satellite integration facilities and at launch pad, until end of mission, passing through launch and separation, insertion into the final orbit, orbit correction maneuvers, interplanetary cruise, and planetary insertion or landing. A typical ESA ground segment includes a Mission Control System (MCS) responsible for the processing and visualization of housekeeping telemetry and generation of telecommands, a Flight Dynamics System (FDS) in charge of orbit determination and prediction, maneuver control and optimization, and attitude determination, as well as other subsystems used for mission planning, data dissemination, and testing.

Access to space is ensured by a world-wide distributed multimission network of antennas of different diameters called ESTRACK[11] (European Space Tracking network) connected to the above ESOC-located subsystems through a wide-area network (WAN). ESTRACK includes (among other terminals):

- A 5-m terminal located on Santa Maria Island, Azores, is used for launcher S-band tracking.
- Two 13-m and 15-m antennas located in Kiruna, Sweden, are used for near-Earth and Earth-observation missions.
- Three 15-m antennas located in Perth, Western Australia (this antenna will not be available starting in 2016); Maspalomas, Spain; and Kourou, French Guyana, supporting launch and early orbit phase (LEOP) operations in S-band and X-band as well as S-band routine operations for near-Earth missions.
- Three deep-space 35-m antennas located in New Norcia (DS1, Western Australia), Cebreros (DS2, Spain), and Malargüe (DS3, Argentina), ensuring uninterrupted coverage for interplanetary missions, supporting routine operations in S-/X-/Ka-band.

A typical ESA ground segment data flow is shown in Figure 18.

---

[11] http://www.esa.int/Our_Activities/Operations/Estrack_tracking_stations.

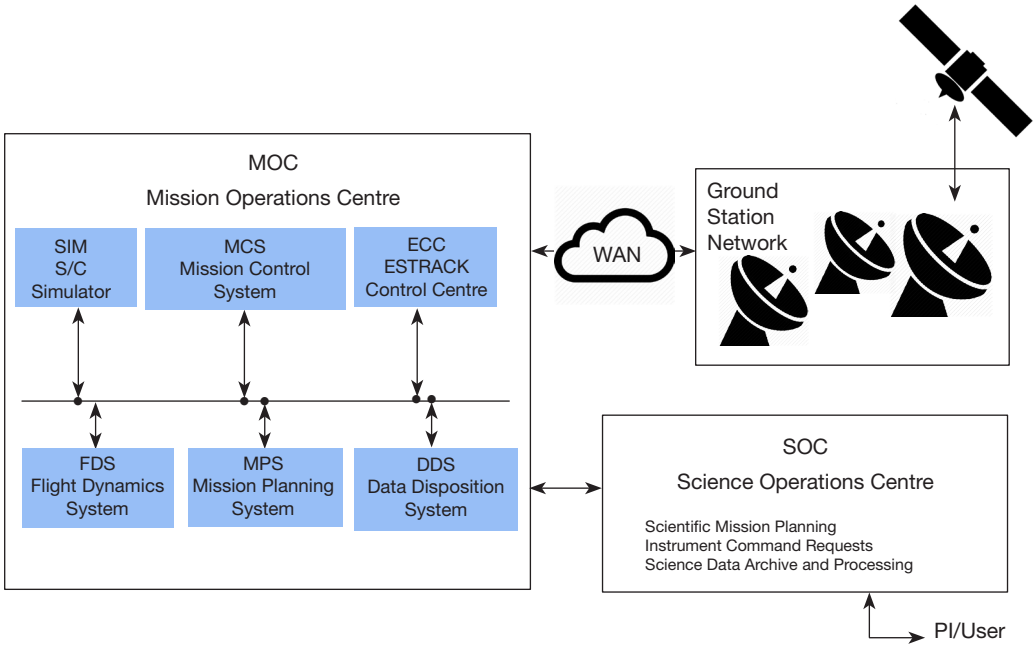

Figure 18. A typical ESA ground segment.

The design and main specifications of the deep-space antennas are reported in [27]. The actual performance of DS1, DS2, and DS3 exceed the specifications. The downlink performance in X-band, and especially in Ka-band, are affected by the presence of the atmosphere, which introduces signal attenuation and increase of the antenna system temperature. Guaranteed figures (for a given percentage of time) can be computed according to the relevant ITU-R recommendation [28].

The ESA antennas support most modulations, coding schemes, and SLE services recommended by the CCSDS, with specific technical constraints that must be verified when negotiating a cross-support. As far as deep-space tracking is concerned, ESA antennas can perform Doppler measurement on signals with suppressed and remnant carrier, with accuracy on the order of 0.1 mm/s with 1-min integration, and ranging on signals with remnant carrier with jitter accuracy in the meter region. Due to the large baselines between its deep-space antennas, ESA can perform ΔDOR [29] for precise angular measurement of the spacecraft in the plane of sky, with angular accuracy in the order of 15 nanoradians.

Due to increasingly demanding requirements in terms of return data volume, spacecraft operability and deep-space navigation, ESA is studying various enhancement of the 35-m antenna systems that are related to near-Earth and interplanetary missions:

- Enhanced X-band and Ka-band G/T
- Enhanced X-band EIRP
- Implementation of simultaneous Gaussian minimum-shift keying (GMSK) and pseudo-noise (PN) ranging
- Implementation of Ka-band uplink in DS3
- Enhanced ΔDOR

The enhancement of X-band and Ka-band G/T can be achieved by extending the cryo cooling (currently limited to the low-noise amplifiers) to the feed assembly, as studied and implemented by NASA/JPL [30]. The expected G/T improvement from such implementation is on the order of 2 dB at Ka-band and 1 dB at X-band in clear sky conditions, bringing the downlink performance of the ESA antennas to essentially equivalent performance of comparable-diameter antennas of the NASA/JPL DSN.

The motivation for enhanced uplink performance is linked to the capability of recovering deep-space missions, in those scenarios where correct spacecraft attitude cannot be ensured and communications have to be established through the onboard low-gain antenna. The enhancement under consideration is for an uplink power of 80 kW at antenna aperture, versus the current 20 kW, leading to an overall 6 dB increase in the current EIRP.

The implementation of simultaneous GMSK and PN ranging, following the related publication CCSDS Blue Book [31], will remove the constraint of not performing ranging during downlink operation with (band-efficient) GMSK modulation, simplifying mission operations.

The implementation (already partially completed) of Ka-band uplink in DS3 is part of a broader ESA objective to achieve full radio science capabilities. The link will indeed allow establishing three coherent links (X-/X-band X-/Ka-band, and Ka-/Ka-band) with deep-space satellites equipped with a Ka-/Ka-band translator on top of the X-/X-/Ka-band transponder, thus allowing full removal of plasma disturbances, which are the dominant error source for tracking observables during superior solar conjunctions. The use of Ka-band uplink could also be considered for telecommand transmission in the future, especially for critical operations performed during superior solar conjunctions at low separation angle with the Sun.

Finally, ESA plans to improve its ΔDOR system for accuracy as good as down to 1 nanoradian, for enhanced deep-space navigation.

The above enhancements may be considered in feasibility studies involving the ESA ground segment in the long term, even though the actual implementation is still to be confirmed, taking into account programmatic constraints.

The long-term plan for the S-/X-band 15-m antennas is under evaluation by ESA, taking into account cost and utilization aspects. At present, a very limited evolution of the terminals is planned, the focus being on sustaining actions to extend the lifetime for support to flying missions.

VII. Ground Data System for Interplanetary Smallsats

AMMOS provides most of the ground data system functions needed to design, implement, and operate a mission operations system (MOS) for all mission types and classes. The development and maintenance of AMMOS is managed by the Multimission Ground Systems and Services (MGSS) Organization in JPL's IND.

AMMOS consists of a core set of products that can be readily integrated to meet specific needs of individual missions. NASA Headquarters funds the system maintenance that ensures an ever-evolving reliable system. The multimission AMMOS ground system has been in existence for more than 20 years and continuously evolves to meet the technical needs of new upcoming missions. Over the years, AMMOS has become more flexible and nimble and can be tailored for use by projects of various mission types, from the simplest deep-space CubeSat to more complex multi-instrument flagship missions. It has been developed and fully tested to aid missions that would otherwise need to build a ground system from scratch. In general, AMMOS provides capabilities in the areas of uplink, downlink, mission information processing, flight dynamics and control, and mission infrastructure. For smallsat missions in LEO, not all of these capabilities will be required. But as the concepts of operations become more and more complicated as the smallsat missions migrate to deep space, the need for more complex tools may arise. This is where AMMOS can be very beneficial.

A. AMMOS Tools and Services

The MGSS offers AMMOS tools and services in the following functional areas of a typical MOS.

Planning and sequencing. Responsible for the generation of mission plans, science observation plans, and sequence and command generation for flight projects. The products of these uplink functions are used to communicate with and control the spacecraft. Spacecraft operability constraints, mission rules, and flight rules are enforced, and spacecraft activities, science activities, and instrument activities are merged during the planning and sequencing process to produce integrated, conflict-free command products to control the spacecraft.

Downlink. Provides for capturing and distributing flight system data, maintaining knowledge of flight system performance, and ensuring its continued flight system health and safety. It also provides system engineering to sustain these capabilities.

Navigation and mission design. Provides for maintaining knowledge of flight system location/velocity and planning its trajectory for future mission activities.

Operations engineering. Provides cross-cutting and support functions necessary to operate and sustain a MOS.

Ground data system integration, test, and deployment. GDS integration, test, deployment, and support functions offer flight projects the option of utilizing experts in AMMOS integration, installation, testing, monitoring, and maintaining the uplink and downlink functions of AMMOS, resulting in a highly operable GDS component.

Figure 19 shows in which functional areas AMMOS tools and services are available within the context of a typical MOS.[12]

---

[12] A comprehensive list can be found in the AMMOS catalog at http://ammos.jpl.nasa.gov. (A JPL login is required, or request an account as directed on the website.)

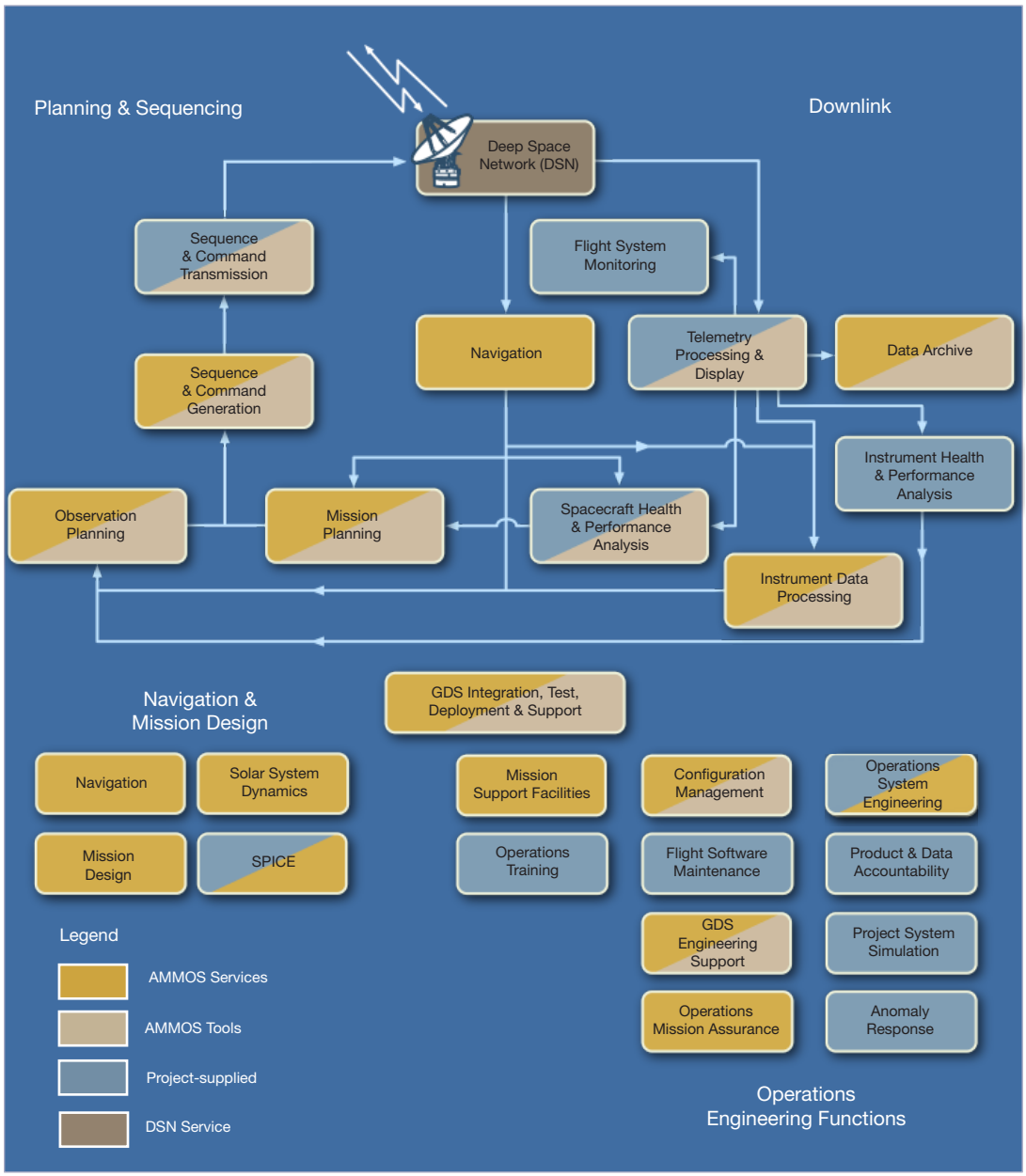

Figure 19. AMMOS tools and services.

B. AMMOS Adaptation for Interplanetary Smallsats — Case Study: INSPIRE

INSPIRE, the first of several deep-space CubeSats being developed at JPL, is using AMMOS tools and services to great effect. INSPIRE consists of two spacecraft. AMMOS provided the AMMOS Multi-mission Data Processing and Control System (AMPCS) to command and monitor the spacecraft that are compatible with the DSN-supported interfaces and protocols. AMPCS is a reusable, multimission ground data processing, archival, visualization, and command system used for spacecraft testing and mission operations. The system was easy to configure and greatly aided in the flight system development and enabled testing with the same tools as will be used for operations. This effort was described in [32].

In working with INSPIRE, MGSS recognized the need for helping new missions getting into the deep-space regime with minimal costs. This led to the creation of the IND Customer Assistance Package (ICAP). The ICAP is intended to be a support package designed to provide mission GDS engineers with a set of telemetry and command capabilities on the first day of the mission, with little or no involvement from MGSS. In this way, the cost to the cost-constrained missions is minimized, as long as the missions use standard capabilities and features. In addition, the ICAP covers key aspects of working with the DSN and issues associated with getting ready for and executing operations in the deep-space environment that are not typically encountered in LEO.

VIII. Concluding Remarks and Future Trends

In this article, we discuss the next-generation ground network architecture and its evolutionary path for communications and tracking of interplanetary smallsats (which includes CubeSats). We describe the unique characteristics and needs of interplanetary smallsat missions, and detail the ongoing development in CubeSat-compatible radios and high-gain antennas. We then outline various approaches to streamline and to upgrade the current DSN capabilities and processes, and describe new techniques for simultaneous tracking of multiple spacecraft by a ground antenna. We also provide preliminary thoughts on the DSN operation concept and its interfaces with non-DSN antenna facilities and missions, and we discuss the multimission ground data system for interplanetary smallsats.

Moving forward starting with the 2018 SLS launch to the Moon, we expect a large number of interplanetary smallsats that piggyback on and deploy from lunar and deep-space launch vehicles. As the science goals of interplanetary smallsat missions become more challenging, we anticipate the following advances in communications and tracking technologies that would help to fulfill smallsat mission needs:

- *Miniaturization of flight system components*. Traditional flight components will be miniaturized, and this includes software-defined radio transceivers, antennas, and atomic clocks. Recent advances in flight hardware allow the use of complex and stable signaling schemes for efficient deep-space communications and tracking [17] as well as enabling telecommunication science [33]. High-precision, miniaturized attitude control systems will also be needed to point the high-gain antenna and instruments.
- *Migration to higher frequency*. Instead of the UHF-band and S-band frequencies that are commonly used in today's LEO CubeSat missions, Ka-band and optical links are being considered for use in interplanetary smallsat missions [2,34] to increase the data rate and to alleviate the spectrum congestion problem.
- *Deep-space multiple access schemes*. The variety of MSPA schemes discussed in this article can be considered as the near-term solution that provides simultaneous tracking of multiple spacecraft. In the longer-term future, more versatile and efficient multiple access schemes would be needed. One consideration is to upgrade the current code-division multiple access (CDMA) scheme that is technically mature in the terrestrial wireless environment to operate in the deep-space environment, which is characterized by low

signal-to-noise ratio, high dynamics, and a requirement for navigation tracking support. Recent studies indicate that this approach is promising [35,36].

- *Multi-hop communications*. Some recent interplanetary smallsat mission concepts call for a fleet of smallsats, with one or more mother ships that serve as in situ communication nodes that relay data to and from Earth [4,37,38]. This necessitates the development of novel protocols and routing schemes for a dynamic space network to ensure reliability and efficient data delivery from the smallsats to Earth.

Acknowledgments

The research described in this article was supported by NASA's Space Communication and Navigation (SCaN) Program.

References

[1] J. Sauder, N. Chahat, M. Thomson, R. Hodges, and Y. Rahmat-Samii, "Ultra-Compact Ka-Band Parabolic Deployable Antenna for CubeSats," 4th Interplanetary CubeSat Workshop, South Kensington, London, UK, May 2015.

[2] R. Hodges, B. Shah, D. Muthulingham, and T. Freeman, "ISARA: Mission Overview," 27th Annual AIAA/USU Small Satellite Conference, Logan, Utah, August 2013.

[3] A. Babuscia, B. Corbin, M. Knapp, R. Jensen-Clem, M. Van de Loo, and M. S. Seager, "Inflatable Antenna for CubeSats: Motivation for Development and Antenna Design," *Acta Astronautica*, vol. 91, pp. 322–332, 2013.

[4] R. L. Staehle, D. Blaney, H. Hemmati, D. Jones, A. Klesh, P. Liewer, et al., "Interplanetary CubeSats: Opening the Solar System to a Broad Community at Lower Cost," *Journal of Small Satellites (JoSS)*, vol. 2, no. 1, pp. 161–186, 2013. http://www.jossonline.com/Papers1441.html?id=ftu84kjc

[5] A. Klesh, J. Baker, J. Castillo-Rogez, L. Halatek, N. Murphy, C. Raymond, et al., "INSPIRE: Interplanetary NanoSpacecraft Pathfinder In Relevant Environment," 27th Annual AIAA/USU Small Satellite Conference, Logan, Utah, August 2013.

[6] P. Banazadeh, P. Hayne, B. Cohen, and R. Staehle, "Lunar FlashLight: A CubeSat Architecture for Deep Space Exploration" *Proceedings of Interplanetary Small Satellite Conference (ISSC)*, Pasadena, California, 2014.

[7] A. Frick, J. Castillo-Rogez, L. Johnson, and J. Dervan, "NEA Scout: A CubeSat Architecture for Near Earth Easteroid (NEA) Exploration," *Proceedings of Interplanetary Small Satellite Conference (ISSC)*, Pasadena, California, 2014.

[8] M. Sorgenfrei, and B. Lewis, "BioSentinel: Enabling CubeSat-Scale Biological Research Beyond Low Earth Orbit," *Proceedings of Interplanetary Small Satellite Conference (ISSC)*, Pasadena, California, 2014.

[9] F. Ongaro, "How is ESA Inventing Space?" ReInventing Space Conference, The Royal Society, London, UK, November 19, 2014.

[10] A. Parmar, "The ESA Cosmic Vision Program For Future Space Astronomy and Solar System Science Missions," *Proceedings of the 65th International Astronautical Congress*, Toronto, Canada, September 29–October 3, 2014.

[11] M. A. Viscio, N. Viola, S. Corpino, F. Stesina, S. Fineschi, F. Fumenti, et al., "Interplanetary CubeSats System for Space Weather Evaluations and Technology Demonstration," *Acta Astronautica*, vol. 104, pp. 516–525, 2014.

[12] P. C. Liewer, A. T. Klesh, M. W. Lo, N. Murphy, R. L. Staehle, V. Angelopoulos, et al., "A Fractionated Space Weather Base at L5 Using CubeSats and Solar Sails," ebook: *Advances in Solar Sailing*, vol. 1, M. Macdonald, ed., Springer Praxis Books, Springer-Verlag, Berlin, Heidelberg, pp. 269–288, 2014.
http://www.springer.com/us/book/9783642349065

[13] S. Corpino and F. Nichele, "CubeSats to Support Mars Exploration: Three Scenarios for Valuable Planetary Science Missions," BIS-RS-2014-38, ReInventing Space Conference, The Royal Society, London, UK, November 20, 2014.

[14] R. Walker and M. Cross, "The European Student Moon Orbiter (ESMO): A Lunar Mission for Education, Outreach and Science," *Acta Astronautica*, vol. 66 (7–8), pp. 1177–1188, 2010.

[15] B. Klofas, J. Anderson, and K. Leveque, "A Survey of CubeSat Communication Subsystems," 2008 CubeSat Developers' Workshop, CalPoly San Luis Obispo, California, April 2008.

[16] B. Klofas and K. Leveque, "A Survey of CubeSat Communication Subsystems: 2009–2012," 2008 CubeSat Developers' Workshop, CalPoly San Luis Obispo, California, April 2008.

[17] C. Duncan, "Iris for INSPIRE CubeSat Compatible, DSN Compatible Transponder," 27th Annual AIAA/USU Small Satellite Conference, Logan, Utah, 2013.

[18] D. S. Abraham and B. E. MacNeal, "Low-Cost Communications Concept for Smallsats: Opportunistic MSPA," *NASA Tech Briefs*, vol. 38, no. 5, pp. 56 and 58, May 2014.

[19] D. S. Abraham, S. G. Finley, D. P. Heckman, N. E. Lay, C. M. Lush, and B. E. MacNeal, "Opportunistic MSPA Demonstration #1: Final Report," *The Interplanetary Network Progress Report*, vol. 42-200, Jet Propulsion Laboratory, Pasadena, California, pp. 1–27, February 15, 2015.
http://ipnpr.jpl.nasa.gov/progress_report/42-200/200B.pdf

[20] Consultative Committee for Space Data Systems, CCSDS 912.1-B-3, Space Link Extension—Forward CLTU Service Specification, Issue 3, July 2010.
http://public.ccsds.org/publications/archive/912x1b3.pdf

[21] Consultative Committee for Space Data Systems, CCSDS 912.3-B-2, Space Link Extension—Forward Space Packet Service Specification, Issue 2, July 2010.
http://public.ccsds.org/publications/archive/912x3b2ec1.pdf

[22] B. Malphrus, J. Kruth, M. Combs, N. Fite, B. Twiggs, and R. Schulze, "A University-Based Ground Station: The 21 M Antenna at Morehead State University," AIAA-2010-2156, *Proceedings of SpaceOps*, American Institute of Aeronautics and Astronautics, pp. 1127–1138, 2010.

[23] S. Schaire, S. Altunc, B. Malphrus, and J. Kruth, "NASA Wallops Flight Facility–Morehead State Ground Network for Small Satellite Operations," AIAA-2014-19-SS0-2, *Proceedings of SpaceOps*, American Institute of Aeronautics and Astronautics, April 2014.

[24] B. Malphrus, M. Combs, J. Kruth, K. Brown, B. Twiggs, E. Thomas, et al., "University-Based Nanosatellite Missions and Ground Operations at Morehead State University," *Proceedings of SpaceOps*, American Institute of Aeronautics and Astronautics, Smallsat Journal, SSC12-VII-6, 2012.

[25] S. H. Schaire, S. Altunc, and B. K. Malphrus, "CubeSat Communication Direction and Capabilities at Morehead State University and NASA Goddard Space Flight Center, Wallops Flight Facility," *Proceedings of AIAA Small Satellite Conference*, SSC13-WK-7, August 13, 2013.

[26] D. Evans, O. Koudelka, L. Alminde, and K. Schilling, "The ESA OPS-SAT CubeSat Mission," The Small Satellites Systems and Services (4S) Symposium, Majorca, Spain, May 26–30, 2014.

[27] E. Vassallo, R. Martin, R. Maddè, M. Lanuc, P. Besso, et al., "The European Space Agency's Deep-Space Antennas," *Proceedings of the IEEE*, vol. 95, no. 11, pp. 2111–2131, November 2007.

[28] International Telecommunication Union Recommendations (ITU-R), P (radiowave propagation) series: P.618-10, P.676, P.678, P.835-4, P.840-4, P.837-5, and P. 839. http://www.itu.int/

[29] R. Maddè, T. Morley, M. Lanucara, R. Abelló, M. Mercolino, et al., "A Common Receiver Architecture for ESA Radio Science and Delta-DOR Support," *Proceedings of the IEEE*, vol. 95, no. 11, pp. 2215–2223, November 2007.

[30] S. D. Slobin, "34-m BWG Stations Telecommunications Interfaces," *DSN Telecommunications Link Design Handbook*, DSN No. 810-005, Module 104, Rev. H, Jet Propulsion Laboratory, Pasadena, California, April 1, 2015. This publication has periodic updates. http://deepspace.jpl.nasa.gov/dsndocs/810-005/104/104H.pdf

[31] Consultative Committee for Space Data Systems, CCSDS 401.0-B-25, Radio Frequency and Modulation Systems—Part 1: Earth Stations and Spacecraft, Issue 25, February 2015.
http://public.ccsds.org/publications/archive/401x0b25.pdf

[32] W. Quach, L. DeForrest, A. Klesh, and J. Schoolcraft, "Adapting a Large-Scale Multi-Mission Ground System for Low-Cost CubeSats," *Proceedings of AIAA SpaceOps*, Pasadena, California, May 2014.

[33] K. Oudrhiri, S. Asmar, and K. Cahoy, "Enhancing Radio Science Missions with CubeSats," 4th Interplanetary CubeSat Workshop, iCubeSat 2015, South Kensington, London, UK, May 2015.

[34] S. Janson and R. Welle, "The NASA Optical Communication and Sensor Demonstration Program," *Proceedings of the 27th Annual AIAA/USU Small Satellite Conference*, Logan, Utah, 2014.

[35] A. Babuscia, C. Hung, D. Divsalar, and K. Cheung, "Code Division Multiple Access Communications Systems for CubeSats at Lunar Lagrangian L1," *Proceedings of the IEEE Aerospace Conference*, Big Sky, Montana, March 2014.

[36] A. Babuscia, D. Divsalar, and K. Cheung, "CDMA Communications Systems with Constant Envelope Modulation for CubeSats," *Proceedings of the IEEE Aerospace Conference*, Big Sky, Montana, March 2015.

[37] M. Sorgenfrei, M. Nehrenz, and K. Shish, "Operational Considerations of a Swarm of CubeSat-Class Spacecraft," *Proceedings of AIAA SpaceOps*, Pasadena, California, May 2014.

[38] M. Knapp, A. Babuscia, R. Jensen-Clem, F. Martel, and S. Seager, "Solar Observation Low-Frequency Array for Radio Astronomy/Separated Antennas Reconfigurable Array (SOLARA/SARA)," presentation at Keck Institute of Space Studies (KISS) Workshop, Planetary Magnetic Fields: Planetary Interiors and Habitability, California Institute of Technology, Pasadena, California, August 2013.