Reverse Osmosis Water Purification System

H. G. Ahlstrom, P. S. Hames, and F. J. Menninger
Ground Antenna and Facilities Engineering Section

A new reverse osmosis water purification system, which uses a programmable controller (PC) as the control system, was designed and built to maintain the cleanliness and level of water for various systems of a 64-m antenna. The installation operates with other equipment of the antenna at the Goldstone Deep Space Communication Complex. The reverse osmosis system was designed to be fully automatic; with the PC, many complex sequential and timed logic networks were easily implemented and are modifiable. The PC monitors water levels, pressures, flows, control panel requests, and set points on analog meters; with this information various processes are initiated, monitored, modified, halted, or eliminated as required by the equipment being supplied pure water.

I. Introduction

A reverse osmosis water purification system was designed and installed for the Goldstone Deep Space Communication Complex, California. This article describes the water treatment requirements, control philosophy, and hardware and software specifications.

The moving part of the 64-m antenna shown in Fig. 1, a complex structure weighing over 3.2×10^6 kg (7×10^6 lb), rotates horizontally on a film of oil 0.2 mm (0.008 in.) thick beneath three large pads. The risk of losing a spacecraft track is high if the hydrostatic bearing fails due to insufficient cooling.

There are three requirements for pure water for systems that support the antenna operation. The first is cooling water for the hydraulic system that maintains the critical film of oil beneath each pad. The second requirement is for pure coolant water for the high-power transmitter. The third pure water use is for make-up water for the boilers and chilled-water loop of the air conditioning system. Water supplied to the station is pumped from nearby underground wells. The chemical composition and quality are not adequate for direct use; therefore, a purification system is necessary to meet the specifications.

II. Functional Requirements

The performance and functional requirements for the pure water system can be summarized as follows:

The two principal design criteria for the water purification system are reliability and flexibility – reliability is derived from the mission requirements and flexibility from the need for versatility in monitoring and control, to permit unattended operation. This versatility must meet constantly changing process requirements, which include such events as placing an operation on "hold" to perform another process, and sensing the proper conditions for returning to the original operation.

Without automatic controls, such variations would require labor-intensive attention to the equipment.

Several water purification systems were considered, including gas/oil fired water distillation, solar stills, reverse osmosis, and purchasing purified water from a commercial water supplier. The stringent cleanliness standards for the product of this system, as well as the reliability required, led to the selection of reverse osmosis as the type of purification preferred. The need for reliability and flexibility resulted also in the selection of a programmable controller to manage the operation. The reverse osmosis system is shown in Fig. 2.

It was required that the plant be nearly maintenance free. The new design should have process error checking and fully automated operation, should automatically perform routine "housekeeping" functions, and should be capable of remotely controlled operation.

III. Reverse Osmosis Principles of Operation

Osmosis is the spontaneous passage of a liquid from a dilute to a more concentrated solution through a semipermeable membrane, which allows passage of the liquid but not of dissolved solids. Reverse osmosis (R.O.) is the forced reversal of this natural phenomenon, usually accomplished by applying enough pressure to the concentrated solution to overcome the natural pressure (osmotic pressure) of the less concentrated solution.

This property of some membrane materials makes them ideal for water purification. In general application, the membrane unit is made up of either a bundle of fibers approximately the diameter of a human hair, or a spiral-wound membranous material, within an epoxy tube. In either case, the membrane surrounds a central core, within which the clean, or "product" water flows after permeating through the membrane to the core.

The reject water, or "concentrate," emerges from the outside membrane material on the same side where the raw water entered. No chemical reactions or phase transitions are involved. One of the principal advantages of semipermeable membranes over other methods of separating water from its contaminants is that, with proper care, the membranes can be expected to last from three to five years.

This article focuses on the application of a programmable controller (PC) to control the R.O. process. It is therefore necessary to be aware of the constraints on the operation of the system and the process variations to take advantage of the flexibility the programmable controller provides.

IV. The Reverse Osmosis Process

The water purification process at the Goldstone antenna is divided into three stages: pretreatment, reverse osmosis, and post-treatment. The process is controlled by a programmable controller. The controller's actions are determined by the status of switches on the control panel and various sensors on the process equipment. An instrumentation panel monitors various analog signals and reports out-of-bounds conditions to the PC.

Figure 3 is a simplified flow diagram of the R.O. system. Many essential controls are omitted for simplification; the diagram is not intended as a complete representation but only as an aid to the discussion.

A. Pretreatment Stage

The reverse osmosis unit processes raw water from either the local water supply (demand tank fill) or the cooling tower sump water (tower recycle). The water cannot be run directly into the R.O. membranes; it must first go through preliminary processing so as not to damage the membranes. This pretreatment involves flowing the water through a sand filter (to remove large dirt particles) and a carbon filter (to remove chlorine, which would oxidize the membranes), injecting acid to control pH level to a slightly acidic condition (excess alkalinity can foul membranes), and flowing the water through a 10-micron prefilter and then past sensors that check for pH level and the presence of chlorine. (Raw water typically has a pH of 8.5 to 11.5; the R.O. membranes require the pH to be approximately 6.0.) Now the water contains very few nondissolved solids, but is still high in dissolved solids. It is now ready for the reverse osmosis treatment.

B. Reverse Osmosis Treatment Stage

The reverse osmosis treatment section consists of pressure switches, flow controls, conductivity ratio sensors, flow meters, R.O. membranes, pressure gauges, and a main pump. Each of these is critical to the production of purified water.

The inlet pressure to the pump must remain above 10 psi to avoid cavitation in the pump. The inlet pressure to the membranes must stay below 400 psi; otherwise the membranes will be damaged. Pressure switches monitor these critical items.

The flow controls are adjusted to maintain a ratio of 50 percent product water and 50 percent reject water, with a production flow of 15 gallons per minute. The reject water contains all the impurities removed from the product water and drains into the sewer.

The conductivity ratio sensors are part of the membrane efficiency meter, shown in Fig. 4, measuring the amount of dissolved solids in the water. The total dissolved solids in feedwater are typically 500 to 600 parts per million (ppm). Product water typically contains less than 45 ppm. The meter determines what percentage of dissolved solids is being rejected by the membranes; when it drops below 90 percent, the PRODUCT WATER LOW REJECT RATIO error signal is generated.

C. Post-Treatment Stage

Product water flows through an ultraviolet sterilizer, and then to either the demand tank by way of a degassifier, or to the cooling tower for sump recycle. The ultraviolet sterilizer kills bacteria in the water. The degassifier is a tall chamber above the demand tank, filled with saddle packing; water flows down over these saddles as air is simultaneously blown up over them removing dissolved gasses.

From the degassifier, product water flows into the demand tank until it reaches a preset level, monitored by a level switch. The demand tank can then drain to either the shutdown flush pump, or the demand pump. The shutdown flush pump supplies product water to the main pump for a cleaning flush of the membranes after every operation. The demand pump supplies water to the additional PC-controlled functions.

V. Additional Control Functions of the PC

In addition to processing water through the R.O. unit, the PC manages the water level of the cooling tower, a transmitter coolant storage tank, and an air conditioning chilled water storage tank. In addition, it manages the cleanliness of the cooling tower. The demand pump pumps water to three places, as selected by solenoid valves: the heating and air conditioning system (make-up water), the cooling tower sump, or the transmitter coolant system storage tank through a deionizer.

A. Cooling Tower Functions

A front panel switch, as shown in Fig. 5, tells the PC whether to refill the sump with raw water, purified water from the R.O., or nothing. The cleanliness of the tower water is monitored by a conductivity meter on the instrument panel. When a preset high limit in the conductivity meter is reached, the PC starts a cleanup process as determined by another front panel switch, which tells the PC whether to recycle the sump water through the R.O. or to pump it to the drain (blow down). Blow down is the operation of removing water from the sump and replacing it with fresh water. The controller blows down the sump by pumping water to drain and replacing the lost water with either raw or R.O. water, as selected. (If neither recycle nor blow down is selected, an alarm is generated.) When conductivity reaches the low limit, the PC ends the cleanup process.

In recycle mode, the R.O. returns only 50 percent of the water it removes from the tower. If the refill switch is on R.O., then the other 50 percent is furnished from the demand tank. Since the R.O. must be flushed after each water producing cycle, there must be enough water in the demand tank to flush the R.O. membranes. Therefore, when the demand tank is below this middle level switch the PC will first fill the demand tank before proceeding with the recycle request.

B. Transmitter Tank Fill Function

The front panel switch selects between MANUAL–OFF–AUTOMATIC refill of the transmitter coolant tank. In automatic, a level switch indicates to the PC the need for water. (In manual, the level switch is overridden.) If the demand tank is not empty and the tower is not being refilled, the demand pump is turned on and a valve opens to send water to the transmitter coolant tank through a deionizer. The deionizer further purifies the water to a resistivity of at least 2 megohms/centimeter. (With a fresh deionizer, the output can be as high as 16 megohms/centimeter.) The water is monitored by a resistivity meter that has a preset low-level trip point, at which the XMTR WATER LOW RESISTIVITY error signal is generated when the water is too conductive. To prevent excess water from being pumped to the transmitter, this function can be active for only ten hours. Then the system must be reset before more water will be pumped to the transmitter.

C. Air Conditioning System Fill Function

In normal operation, a manual valve is opened and water is allowed to flow down to a chilled-water storage tank at the control building for the air conditioning system and to the humidifiers. (There is an elevation difference of approximately 30 feet.) If a large quantity of water is required, the demand pump may be turned on and the line to the storage tank pressurized (G-86 PRESSURIZE front panel indicator on). This function has the lowest priority, and is interruptible by the tower-refill-with-R.O.-water process or the transmitter-tank-fill process. To prevent excess water from being pumped to the storage tank, this function is active for only 10 hours. Then the system must be reset before more water may be pumped.

VI. Housekeeping Functions

At the end of each water-producing operation, the system automatically goes into a "shutdown flush" cycle. The flush pump pumps product water from the demand tank to the

main pump and then to the reverse osmosis unit. The product water from this operation returns to the demand tank or sump, depending on the production cycle that was just finished. The purpose of this flush is to feed very pure water into the membranes so as to flush out any contaminants.

A high-flow flush is performed once each day. (This is different from a shutdown flush and is performed even if no water production cycles have taken place that day.) A solenoid valve is opened to bypass the reject flow control valve; the reduced backpressure causes 90 percent of the water to go out the reject ports, thus flushing any solids from the surface of the membranes. The high-flow flush of the membranes lasts for fifteen minutes. In addition, once a week the sand filter and the carbon filter are backflushed, one at a time. Each of these filters is also backflushed when a high pressure drop exists across the filter.

All of these operations are part of programmed maintenance activities, independent of any other actions, and are initiated by the programmable controller's software clock. They are, however, subject to the same monitoring and alarm controls that accompany all other operations. The timing is part of the PC program; no additional hardware is required.

The sand filter and carbon filter backflush and the high-flow flush may be activated manually by using the power of the PC. This capability was accomplished without the use of an additional front panel switch. When all process selector switches are turned to OFF, and the ALARM ACKNOWLEDGE button is pushed twice, all three flushes are enabled. The sand filter is flushed first, followed by the carbon filter, and then the high-flow flush. At any time, each flush can be canceled by pushing the ALARM ACKNOWLEDGE button twice. This action establishes a form of reset, in which the first push holds everything, preventing the machine from running; the second push resets all sequences.

VII. Process Alarms

If any of eleven parameters is out of limits, an alarm sequence is initiated. Once a process is started, each instrument can generate an error signal, after a time delay has been satisfied to allow for transient water conditions. Once an error signal is generated, it will create an error routine that shuts off the applicable process. The eight processes of the R.O. system for purposes of alarm shutdown are demand tank fill, tower refill, tower recycle, tower blowdown, transmitter tank refill, air conditioning system pressurize, high-flow flush, and shutdown flush. After a five-minute delay, the controller will attempt to restart the interrupted process. This allows for the air bubbles that can get into the water supply. The delay can be manually overridden by pushing the ALARM ACKNOWLEDGE button twice. If, after two restart attempts, the error still exists, the interrupted process will be shut off until it is manually reset by operator action (pressing the ALARM ACKNOWLEDGE button twice). The error is now a fatal error. When a fatal error occurs, an alarm is sent by the controller to a console at the communications center of the complex.

When an operator acknowledges an alarm, the system is placed in a "hold" condition with a 30-minute allowance for maintenance. If someone should forget to reactivate the system, the hold condition is canceled; if no reset has been input by this time, the system goes into SYSTEM SHUTDOWN mode and transmits an alarm.

VIII. Process History

The PC has been programmed to restart the system and continue, if an error does not reappear. This feature makes it difficult for maintenance personnel to determine whether there have been any errors since the last time the system was checked. Maintenance personnel may not check on the system for up to a week or two at a time. Repetition of a certain error can be a telltale signal that a certain section is becoming marginal and should be checked closely before it shuts the system down. As a maintenance feature, each error increments its own counter inside the PC when it shuts the system down.

There are also counters assigned to each process. Some count the number of times a process has occurred, and others count the number of five-minute increments each is on. These are useful in analyzing how the machinery has been used since the last time it was checked. The number of five-minute increments a process has been on can be multiplied by a constant to give an accounting of how much water was sent for each use; this number is within ten percent of the actual number and does not require costly totalizing flow meters to report back to the PC. There are two totalizing flow meters, one for the product water and one for the reject water, but they do not report back to the PC.

IX. The Programmable Controller Rationale

The large number of control and monitoring actions required in a system such as this makes the programmable controller an ideal choice for control methods. The necessity to effect the control actions, make the control change decisions, and provide the requisite isolation of sensor inputs from control outputs could suggest a completely computer-controlled system. But the sophistication of expensive computer hardware would constitute control "overkill" in this case, and the

cost would be compounded by the environmental protection necessary for most computer installations. The programmable controller modules are rugged and provide the ideal compromise, with cost savings on both ends.

For example, during pre-treatment, the water is monitored for excessive pressure drop at three stages, as well as for high or low pH or the presence of chlorine. If any sensor detects an out-of-limits condition, an error routine is generated and the condition is displayed on the appropriate analog meter. At the same time, corrective action is started by the PC. If another process was in progress at the time, it might continue, or be placed on "hold," depending on the relative importance of the two actions. Note that the relative importance can change; the first priority of the system is to keep the cooling tower sump filled; if the sump is not low, and another process, for instance the production of pure water, is ongoing and a high pressure drop occurs, the process would be suspended until the excessive pressure drop is corrected by a backflush of the offending tank. If, however, the cooling tower water level is low, refilling to a specified level would take priority and the backwash itself would be put on "hold."

In this application, several different conditions enable various processes. There are 32 inputs, 64 outputs, 114 internal logic relays, and 77 storage registers. Only 44 of the 77 storage registers are used for time delays and time-outs. To implement this design in discrete components would require a relay panel that was cost prohibitive, not to mention labor intensive. Moreover, should a slight change in process requirements occur, the task of rewiring would be time consuming and costly.

From an extensive survey of commercial programmable controllers available for this application, the Square D SY/MAX-20 (Fig. 6) was selected. Following are two of the features that determined the selection.

A. Dual Memory

The dual memory fits the reliability philosophy of this subsystem, which must support a very critical and probably unrepeatable mission. The application memory combines the advantages of random access memory (RAM) and electrically alterable read-only memory (EAROM) to ensure both the program flexibility offered by the RAM and the memory-saving characteristic of the EAROM. Program information stored in the EAROM is retained in the event of power failure, and even if the memory module is removed from the processor. The memory can be reprogrammed as often as desired, the change being as small as one contact or as large as the entire program.

These memory modules had several features unlike those of other manufacturers, at the time of purchase. The memory was programmed, when installed in the PC, with a command from the program to transfer the contents of the RAM to the EAROM. The memory was encased in a steel box with a rugged connector on the back. The connector configuration prevented the memory module from being inserted incorrectly into the PC.

B. Computer Interface Module

Another important feature is the computer interface module, which permits remote control and monitoring, as well as communication with the programmer. In this application all inputs, outputs, internal relays, and storage registers are accessible to a computer at a remote location. A modem in the PC cabinet is used to transmit this data to the computer terminal 14 miles from the pure water system installation. The computer can request any data that is stored in the PC at any time; and the PC can be called up as desired. This allows a historical record of how the system has been performing, and can indicate the development of trends in the process, such as gradually decreasing time between carbon filter backwashes, indicating the approach of the need to replace the carbon.

The computer interface allows access to information in the PC through a non-proprietary serial port. Any computer with a serial port could be programmed to communicate with the Square D processor.

X. Summary

The reverse osmosis water purification system for the NASA/JPL 64-meter antenna has been designed and installed. Utilization of a programmable controller made it possible to meet stringent performance requirements. The system has operated successfully since July 1982, with little or no preventive maintenance. Due to this increased reliability performance, the cooling system of the antenna has been much more reliable and has required significantly less maintenance.

One advantage of the programmable controller was the ability to make small program changes quickly during system startup: RAM could be modified and tested operationally before it was transferred to EAROM.

The successful experience gained by this PC installation led to the selection of PCs for control of other facilities at the Deep Space Communications Complex. Examples are as follows:

(1) A 15-foot diameter mobile antenna used in the Orion earthquake research program: The SY/MAX-20 PC

controls antenna deployment, storage, and leveling of the trailer and antenna, making it possible to assemble and disassemble the system in 20 to 30 minutes.

(2) The electrical power generating station at the Echo Station (DSS 12): This installation, with five 500-kW diesel generators, is also controlled by a SY/MAX-20.

(3) Air conditioning for three buildings at DSS 12, buildings G26 (control room), G34 (hydromechanical building), and G35 (antenna): This complex system, designed to meet the varying needs of three very different structures, utilizes a Square D Model 500 programmable controller, which simplifies control of a highly automated and energy efficient system.

The reverse osmosis water purification system, under programmable controller management, has met all of its principal design objectives: a cost-effective, high reliability, maintenance-free plant that incorporates fully automated operation, process error checking, automatic performance of routine housekeeping functions, and capability of remotely controlled operation.

Fig. 1. The 64-m antenna at Goldstone, California

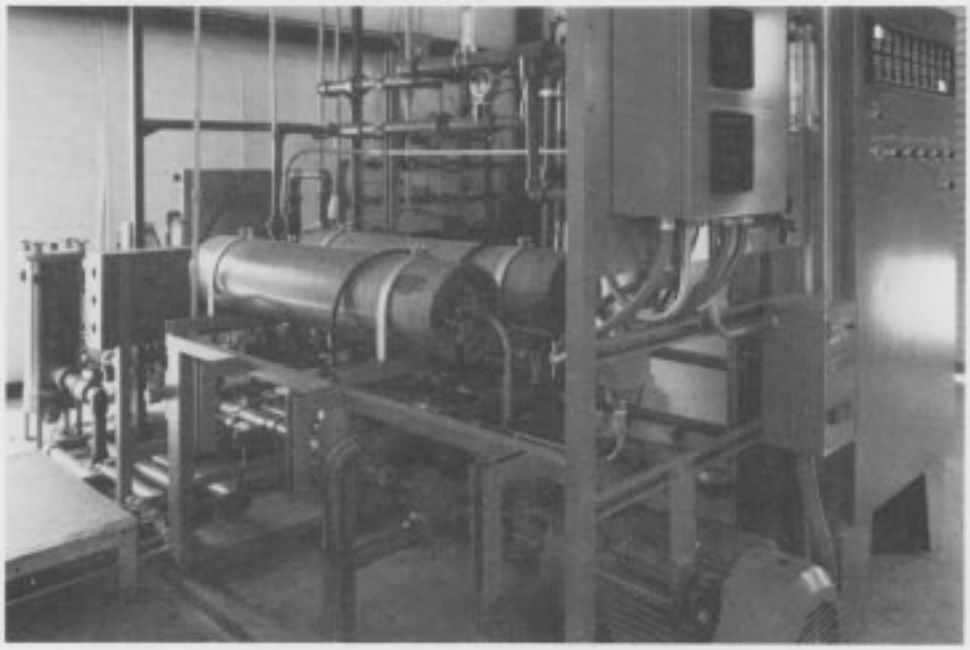

Fig. 2. Reverse osmosis water purification system

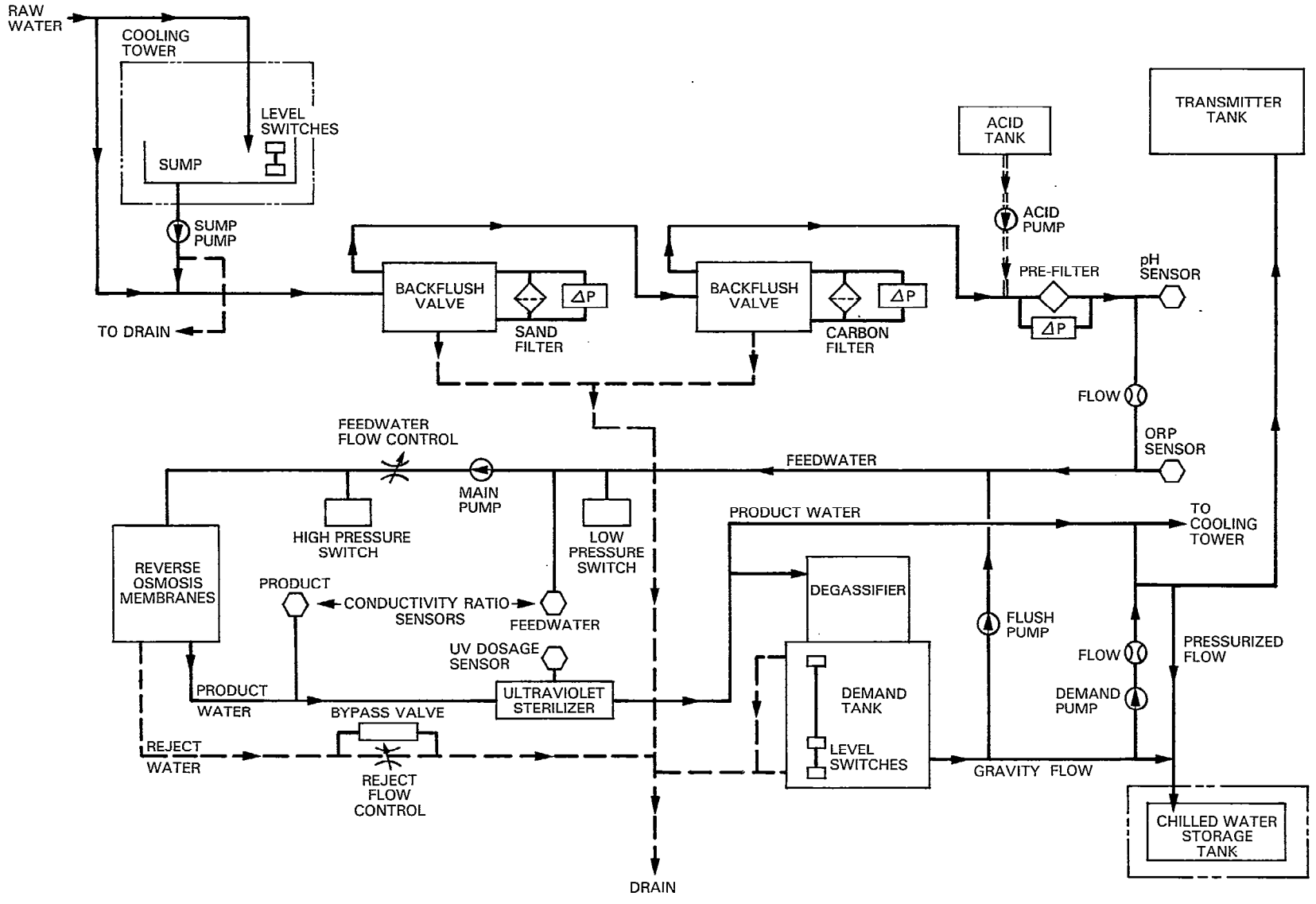

Fig. 3. Simplified flow diagram of the R.O. system

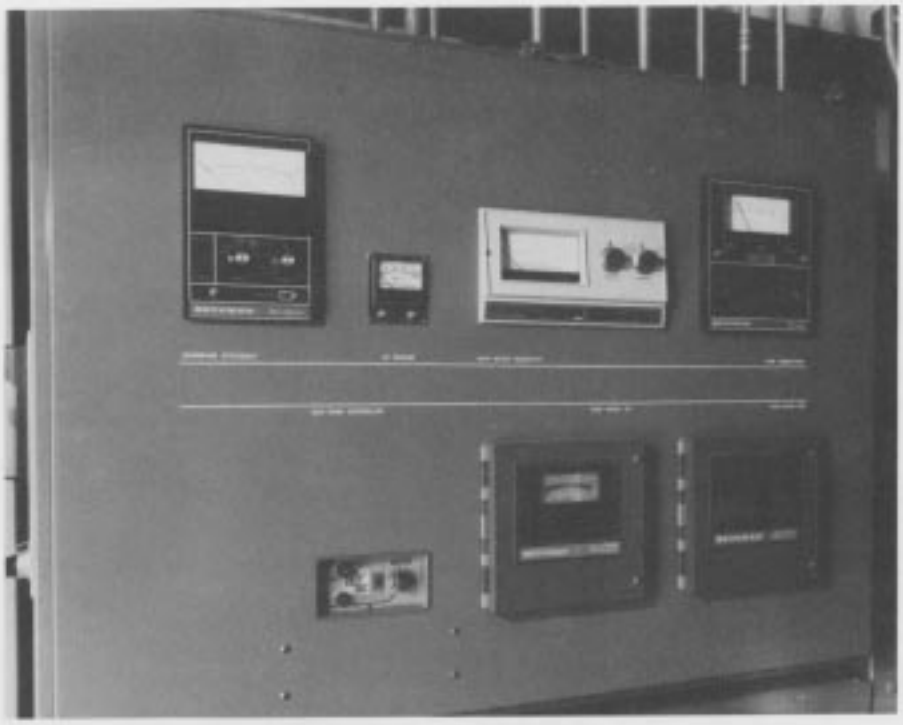

Fig. 4. R.O. instrument panel

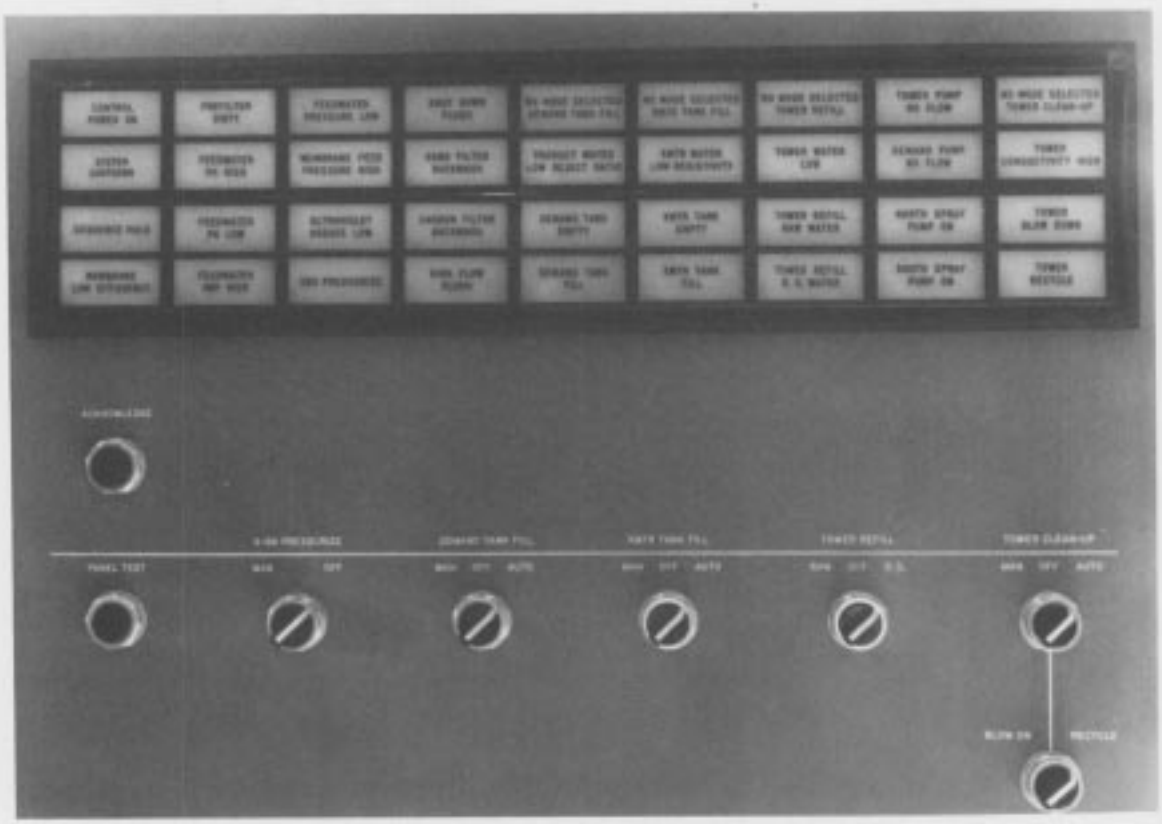

Fig. 5. R.O. control panel

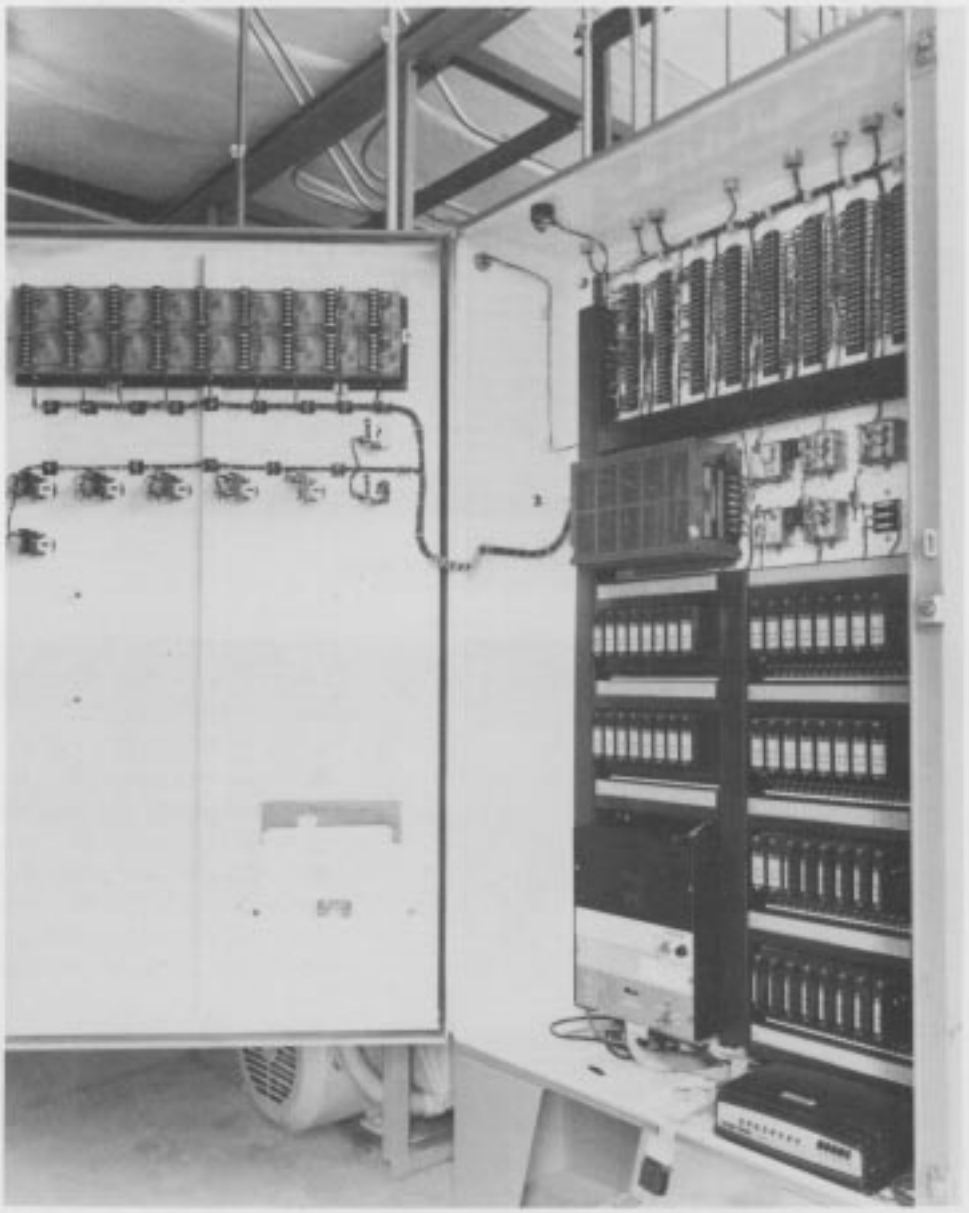

Fig. 6. Programmable controller installation