On Sampling Band-Pass Signals

R. Sadr and M. Shahshahani
Communications Systems Research Section

In this article four techniques for uniform sampling of band-pass signals are examined. The in-phase and quadrature components of the band-pass signal are computed in terms of the samples of the original band-pass signal. The relative implementation merits of these techniques are discussed with reference to the DSN Advanced Receiver.

I. Introduction

In digital signal processing the input signal is reconstructed by first sampling it at a rate determined by the bandwidth of the signal and then using an interpolation formula. It is well known that for low-pass signals (i.e., supported in the frequency domain in the interval $[-W,W]$), the Nyquist sampling rate is sufficient for the reconstruction of the signal. In typical deep-space applications, one often encounters band-pass signals, i.e., signals whose support in the frequency domain lies in $I = I_1 \cup I_2$ where $I_1 = [f_c - W, f_c + W]$, $I_2 = -I_1$ (i.e., the signal vanishes outside the interval I), and f_c is the carrier frequency of the band-pass process. Such signals may be treated as low-pass and sampled at the Nyquist rate, however, this method is inefficient since f_c may be large compared to W. In this article four methods for more efficient sampling of band-pass signals are surveyed and their relative implementation merits are assessed.

II. Sampling Techniques

In the following it is assumed that the input signal is a real band-pass process centered at an intermediate frequency (IF), and it is desired to recover its in-phase and quadrature components.

Four sampling techniques are considered, namely:

(1) *I and Q baseband sampling with analog quadrature mixers (Fig. 1).* The input signal is mixed with the reference in-phase and quadrature component and low-pass filtered to reject the double frequency images produced by the mixing operation. Each channel (in-phase and quadrature) is independently sampled at the rate of $2W$ samples/sec. Note that the effective sampling rate is $4W$ samples/sec.

(2) *I and Q sampling with analog Hilbert transform (Fig. 2).* The input signal is Hilbert transformed, and both the input and its Hilbert transform are then sampled at the rate of $2W$ samples/sec. Here the effective sampling rate is also $4W$ samples/sec.

(3) *Band-pass sampling with digital quadrature mixers (Fig. 3).* The input signal is sampled at the rate of $4W$ samples/sec, and the input samples are then mixed with the samples of reference in-phase and quadrature components and then low-pass filtered to eliminate the double frequency images resulting from the mixing operation. This is performed by using a finite impulse response (FIR) low-pass filter. Since the output of the low-pass filter is bandlimited to $2W$, the output is deci-

mated (undersampled) by a factor of 2, thereby reducing the subsequent processing rate by 1/2. For band-pass sampling of the input signal it is assumed that the input signal is centered at an odd multiple of the bandwidth frequency. In practice, this is not a restrictive assumption since the IF frequency is normally chosen by the hardware design engineer.

(4) *Band-pass sampling with digital Hilbert transform (Fig. 4).* The input signal is sampled at the rate of $4W$ samples/sec, the input samples are then Hilbert transformed using a digital Hilbert transformer. The Hilbert transformed sequence and the input sequence are then mixed with the reference in-phase and quadrature components. For band-pass sampling of the input signal it is assumed that the input signal is centered at an odd multiple of the bandwidth frequency.

Note that cases (1) and (2) are applications of the Shannon-Whittaker theorem, while cases (3) and (4) are obtained from the band-pass sampling theorems discussed below.

III. Comparison of Sampling Methods

In this section the advantages and disadvantages of each of the sampling techniques described in the previous section are considered.

(1) *I and Q baseband sampling with analog quadrature mixers.*

Advantages:

(a) Since the sampling rate of each channel is $2W$ samples/sec, this technique requires the slowest possible A/D convertor and processing rate for the recovery of I and Q samples.

(b) The analog anti-aliasing filter design for this sampling technique is an ideal low-pass filter with a two-sided bandwidth of $2W$. Generally, low-pass analog filters are easier to build than their analog band-pass counterparts.

(c) Due to cost considerations, in some applications it is desirable to demodulate the signal directly from RF frequency to baseband with no intermediate stages. In such cases, this sampling method is the only known technique for recovering the in-phase and quadrature components.

Disadvantages:

(a) It is very difficult to achieve phase and amplitude balance in both in-phase and quadrature reference signals with analog quadrature mixers. Sinsky and Wang [1] have studied this effect when the input signal is simply a sinusoid at frequency f_0, and they show that the effect of unmatched phase or gain is to create an image at $-f_0$, where the power of this image is $A^2/4$ for amplitude mismatch, and $\phi^2/4$ for the phase mismatch. Here A and ϕ denote the fraction of amplitude imbalance and the phase difference in radians between the two channels, respectively. For example, to provide an image rejection ratio (IRR) of −50 dB due to the phase imbalance, the phase imbalance must be kept under 0.36 deg. In [2] a method is proposed for compensating for these imbalances. In applications where the signal-to-noise ratio is high, the consideration of IRR is not significant since the image power (at $-f_0$) is dominated by the channel noise.

(b) The appearance of spurious signals is another problem with analog implementation of quadrature mixers. Normally, high-speed analog mixers are high-speed choppers and produce odd and even harmonics of the carrier frequency. If these harmonics are not properly filtered, they could fold back into the baseband, and severely degrade the performance of the receiver.

(c) This technique requires two A/D convertors.

(2) *I and Q sampling with analog Hilbert transform.* Sometimes referred to as hybrids or 90-deg phase shifters, analog Hilbert transformers are hardly used in practice because of the difficulties inherent in their fabrication. The relative merits and disadvantages of this technique are similar to those of the previous case, except that here additional phase and amplitude imbalance is introduced by the analog Hilbert transformer if it exhibits non-ideal characteristics.

(3) *Band-pass sampling with digital quadrature mixers.*

Advantages:

(a) Since quadrature mixing is done in the digital domain, the phase or amplitude imbalance problems discussed earlier for the baseband sampling with analog quadrature mixers do not appear here.

(b) Low-pass filtering operation is done in the digital domain using FIR filters. These filters are linear phase filters, i.e., they introduce a constant group delay in the output I and Q samples. This is particularly important in applications where ranging or Doppler information must be extracted from the received signal. Digital filters are inherently more robust and flexible than their analog counterparts. The bandwidth of the filter can be easily modified by changing the coefficients of the discrete filter. Furthermore, a special class of filters [3]

called half-band filters (HBF) reduces the computational complexity and the processing rate of this sampling technique by a factor of two.

(c) Only one A/D convertor is required.

(d) If the sampling period is exactly $1/(4f_c)$, then the reference in-phase and quadrature components reduce to an alternating sequence.

Disadvantages:

(a) Faster A/D conversion (e.g., aperture conversion time) is required since the sampling rate is at least at $4W$, as opposed to $2W$ for the baseband sampling case. This translates into stricter design requirements for the A/D design parameters, such as the sample and hold, and aperture time.

(b) Requires a band-pass anti-aliasing filter prior to A/D conversion. As pointed out earlier, analog band-pass filters are more difficult to fabricate than their low-pass counterparts.

(4) *Band-pass sampling with digital Hilbert transform.* This technique is similar to the previous one with the additional disadvantage that the hardware realization of the ideal digital Hilbert transformer requires greater precision (more bits) than that of a digital low-pass filter. The implementation of an ideal digital Hilbert transform is discussed in [4].

IV. Technical Background

A. Analog Signals

Let $O(f_c,W)$ denote the space of all square-integrable complex-valued functions supported in $I = I_1 \cup I_2$, and let $\Omega(f_c,W)$ denote its Fourier transform, i.e., all functions representable in the form

$$x(t) = \int X(\lambda) \exp(2\pi j\lambda t)\, d\lambda \tag{1}$$

where $X \in O(f_c,W)$. Here f_c represents the carrier frequency. In [5] and [6] the following theorem is proved, which can serve as the basis for the reconstruction of the signal from its samples:

Theorem 1. Let

$$\phi(t) = \int_I \exp(2\pi j\lambda t)\, d\lambda$$

(a) If $T = 1/4W$ and $f_c = (2k+1)W$ for some positive integer k, then

$$\int \phi(t-nT)\,\phi(t-mT)\,dt = c\,\delta_{mn}$$

for some non-zero constant c, and the sequence $\{\phi(t-nT), n \in \mathbf{Z}(=\text{integers})\}$ is complete in $\Omega(f_c,W)$. The condition $f_c = (2k+1)W$ is also necessary for orthogonality and completeness of the sequence $\{f(t-nT), n \in \mathbf{Z}\}$.

(b) If $T_1 = (1/2)W$, $f_c = kW$, $\alpha = (1/(4f_c))(2I+1)$, ($I$ integer), then $\{\phi(t-nT_1), n \in \mathbf{Z}\} \cup \{\phi(t-nT_1-\alpha), n \in \mathbf{Z}\}$ is complete and orthogonal in $\Omega(f_c,W)$.

Theorem 1 provides two methods for sampling. Part (a) gives the expansion

$$x(t) = \left(\frac{1}{c}\right)\sum x(nT)\,\phi(t-nT) \tag{2}$$

and the $x(nT)$ terms are the sampled values. For obvious reasons this is called uniform sampling. Quadrature sampling is the technical term for expansion of $x(t)$ in terms of the sequence given in (b). Here one has

$$x(t) = \left(\frac{1}{4W}\right)\sum x(nT_1)\,\phi(t-nT_1) + \left(\frac{1}{4W}\right)\sum x(nT_1+\alpha)\,\phi(t-nT_1-\alpha) \tag{3}$$

As noted earlier, if the RF signal is mixed down by an RF down convertor, then the IF frequency can be adjusted to satisfy the requirements $f_c = (2k+1)W$ or $f_c = kW$ in Theorem 1. In general, one does not expect any relation between f_c and W, and Theorem 1 is not directly applicable. To remedy this situation, let

$$kW < f_c < (k+1)W$$

Either k or $k+1$ is even, say $k = 2I$. If I is odd, regard the band-pass signal $X(\lambda)$ as supported in $I' = I_1' \cup I_2'$ with $I_1' = [f_c' - 2W, f_c' + 2W]$ and $f_c' = kW$, $I_2' = -I_1'$. Then apply Theorem 1, sample at points $(1/(8W))$ and apply part (a) to reconstruct the function. If I is even, then use the same interval I', sample $x(t)$ at the points $n/4W$ and $\beta + (n/4W)$ where $\beta = (2m+1)/4kW$, m is any fixed integer, and use the expansion of part (b).

It is sometimes convenient to express $x(t)$ in the form

$$x(t) = \alpha(t)\cos 2\pi f_c t - \beta(t)\sin 2\pi f_c t \tag{4}$$

where α and β are Fourier transforms of band-limited functions. Here α and β are called the quadrature and in-phase components of the signal. To obtain the expansion of Eq. (4), first note that

$$\phi(t) = -\left(\frac{2}{\pi t}\right) \sin 2\pi W t \cos 2\pi f_c t$$

and substitute the expansion given in part (a) to obtain

$$\alpha(t) = \left(\frac{-1}{2\pi W}\right) \sum x(nT) \left(\frac{\sin 2\pi W(t-nT)}{(t-nT)}\right) \cos 2\pi f_c nT$$

$$\beta(t) = \left(\frac{-1}{2\pi W}\right) \sum x(nT) \left(\frac{\sin 2\pi W(t-nT)}{(t-nT)}\right) \sin 2\pi f_c nT$$

The fact that α and β are Fourier transforms of band-limited functions is a straightforward application of the Paley-Weiner theorem.

Since in practice one can only compute finitely many terms, the problem of rate of convergence of the interpolating series is a significant one. The following proposition and the remark following it provide the answer to this problem:

Proposition 1. If the function $X(\lambda)$ is twice continuously differentiable, then the series in Eqs. (2) and (3) converge absolutely and uniformly in t. Furthermore, in case (a)

$$\left| x(t) - \sum\nolimits_N \right| < c' \frac{\|X''\|}{N}$$

where Σ_N denotes the sum from $-N$ to N in Eq. (1), c' is a constant depending only on W, and $\|X''\|$ is the L^2 norm of the second derivative of X. A similar estimate holds in case (b).

Proof. Integrating Eq. (1) by parts twice and using Cauchy-Schwartz one obtains, for some constant c'' depending only on W,

$$|x(t)| < \left(\frac{c''}{t^2}\right) \|X''\|$$

Substituting the above estimate for $t = nT$ in Eq. (2) and using the upper bound $(2/\pi)$ for ϕ, the desired results are obtained after some simple manipulations.

Remark. The proof of Proposition 1 also shows that the estimate above can be replaced by

$$\left| x(t) - \sum\nolimits_N \right| < c' \frac{\|X^{(k+1)}\|}{N^k}$$

where $X^{(k+1)}$ denotes the $(k+1)$th derivative of X. Therefore, it may appear that the right-hand side can be made arbitrarily small by taking k to be sufficiently large. That this is not the case follows easily from the fact that $\|X^{(k+1)}\|$ has very rapid growth with k. More precisely, since x is analytic, for every M there is $\eta > 0$ such that

$$\left(\int^{-M} + \int_M\right) |x(t)|^2\, dt > \eta \int |x(t)|^2\, dt$$

Therefore

$$\|X^{(k)}\|^2 > \left(\int^{-M} + \int_M\right) |t|^{2k} |x(t)|^2\, dt > \eta M^{2k} \|x\|^2$$

so that $\|X^{(k)}\|$ grows at least as fast as M^k. In the actual numerical calculation of the second derivative of X one may use the approximation

$$\frac{\left(X(\lambda+2\delta) - 2X(\lambda+\delta) + X(\lambda)\right)}{\delta^2}$$

for $X''(\lambda)$ or approximately evaluate

$$\int |t|^4 |x(t)|^2\, dt = \|X''\|^2$$

One may also use a combination of the Fourier and Hilbert transforms to reconstruct the signal in the time domain from its sampled values. Recall that the Hilbert transform of X is

$$\hat{x}(t) = \int \sin(\lambda) \exp(2\pi j \lambda t) X(\lambda)\, d\lambda$$

The following theorem describes how combination of the analog Fourier and Hilbert transforms can be used for the reconstruction from sampled values:

Theorem 2. Assume that the band-pass signal $x(t)$ and its transform $X(\lambda)$ are real. The signal can then be reconstructed from the sampled values $x(n/2W)$ and the Hilbert transform $\hat{x}(n/2W)$ by the formula

$$x(t) = \sum (-1)^n \left[\frac{\sin 2\pi W\left(t - \left(\frac{n}{2W}\right)\right)}{2\pi W\left(t - \left(\frac{n}{2W}\right)\right)}\right] A(n) \cos 2\pi f_c t$$

$$+ \sum (-1)^n \left[\frac{\sin 2\pi W\left(t - \left(\frac{n}{2W}\right)\right)}{2\pi W\left(t - \left(\frac{n}{2W}\right)\right)}\right] B(n) \sin 2\pi f_c t$$

where

$$A(n) = y_1\left(\frac{n}{2W}\right)\cos\left(\frac{2\pi f_c n}{2W}\right) + z_1\left(\frac{n}{2W}\right)\sin\left(\frac{2\pi f_c n}{2W}\right)$$

$$B(n) = y_1\left(\frac{n}{2W}\right)\sin\left(\frac{2\pi f_c n}{2W}\right) - z_1\left(\frac{n}{2W}\right)\cos\left(\frac{2\pi f_c n}{2W}\right)$$

$$y_1\left(\frac{n}{2W}\right) = \left(\frac{1}{2}\right) x\left(\frac{n}{2W}\right)$$

$$z_1\left(\frac{n}{2W}\right) = \left(\frac{1}{2j}\right) \hat{x}\left(\frac{n}{2W}\right)$$

(Notice that since $X(-\lambda) = X(\lambda)$ and X is real, $\hat{x}$ is purely imaginary and z_1 is real.)

Proof. Let χ_1 (resp. χ_2) denote the indicator function of the set I_1 (resp. I_2), and set $X_i(\lambda) = \chi_i(\lambda) X(\lambda)$. Let x_i denote the Fourier transform of X_i. Now $X_1(\lambda)$ admits of the Fourier series expansion

$$X_1(\lambda) = \sum a_n \exp\left(\frac{2\pi jn\lambda}{2W}\right) \tag{5}$$

The coefficient a_n is given by

$$a_n = \left(\frac{1}{2}W\right) \int X_1(\lambda) \exp\left(\frac{-2\pi jn\lambda}{2W}\right) d\lambda$$

i.e.,

$$a_n = \left(\frac{1}{2}W\right) x_1\left(\frac{n}{2W}\right)$$

Substituting Eq. (5) into Eq. (1) and assuming change of order of summation and integration is permissible, one obtains after a simple calculation

$$x_1(t) = \sum x_1\left(\frac{n}{2W}\right) K_1(n,t)$$

where

$$K_1(n,t) = \frac{\exp\left(2\pi ja\left(t - \frac{n}{2W}\right)\right)\sin 2\pi W\left(t - \frac{n}{2W}\right)}{2\pi W\left(t - \frac{n}{2W}\right)}$$

One then decomposes $x_i = y_i + jz_i$ into its real and imaginary parts. Since $x(t)$ is real, x_2 is the complex conjugate of x_1. Substituting in $x = x_1 + x_2$, the desired expansion is obtained.

B. Digital Signals

The reconstruction formulae for the digital case are similar to those for the analog signal. To see this recall that by reconstruction in the digital domain we mean an interpolation formula for $x(t)$ in terms of the sampled values $x(n/2W)$ and the discrete Hilbert transform (DHT) of $x(n/2W)$. By DHT we mean

$$\tilde{x}(t) = \left(\frac{1}{2}\pi j\right) \int \operatorname{sign}(\omega)\, \xi(\omega) \exp(2\pi j\omega t)\, d\omega$$

where $\xi(\omega)$ is the discrete Fourier transform of $x(n/2W)$. Since

$$X(\lambda) = \left(\frac{1}{2}W\right) \sum x\left(\frac{n}{2W}\right) \exp\left(\frac{2\pi j\lambda}{2W}\right)$$

$X(\lambda)$ is given as the discrete Fourier transform of $x(n/2W)$, and hence the interpolation formula for the Hilbert transform is implementable in the digital domain.

C. Non-Deterministic Signals

The above considerations are also applicable to the case where the signal is not deterministic. To be more precise, replace $x(t)$ by a possibly complex-valued stationary process $x(t,\omega)$, or simply $x(t)$, where ω lies in some probability space Ω. We assume that $E\{x(t)\} = 0$ for all t, and the autocorrelation function

$$R(s,t) = R(s-t) = E\{x(t)x(s)^*\}$$

is the Fourier transform of a band-limited function $s(\lambda)$ supported in the interval $[-W,W]$. We want to reconstruct the process, at least for almost all ω. This is possible because the sample paths of such processes are, with probability 1, Fourier transform functions supported in $[-W,W]$ and therefore entire functions. This is the content of a theorem of Belyaev which can be stated as follows [7].

Theorem 3. If R is an entire function of exponential type with the exponent not exceeding W, then with probability 1 all sample paths of the process $x(t)$ are entire functions of exponential type with the exponent not exceeding W.

Therefore, for such a process for almost all ω, $x(t) = x(t,\omega)$ can be extended to the complex plane as a function of t and is in fact the inverse Fourier transform of a band-limited distribution. If it is furthermore assumed that R is the inverse Fourier transform of a continuous function supported in $[-W,W]$, then with probability 1, $x(t)$ is the inverse Fourier transform of a continuous function supported in $[-W,W]$. This implies that the sampling theorem for signals supported in

$[-W,W]$ is applicable to the sample paths of the noise process and for almost all ω, $x(t) = x(t,\omega)$ can be reconstructed from its sampled values at intervals of length $(1/(2W))$ by the same formulae as in the deterministic case.

V. Conclusion

It has been found that band-pass sampling using digital quadrature mixers is the most robust technique for Deep Space Network (DSN) applications. In deep space applications the signal-to-noise ratio (SNR) is extremely low, e.g., the Advanced Receiver performance threshold is at 0 dB with a carrier-to-noise power of −75 dB with a 15 MHz bandwidth. In DSN applications it is necessary to detect telemetry symbols and track signal phase very accurately for ranging and Doppler measurement in order to determine the deep space probe's position and velocity. Thus, the receiving system cannot tolerate any significant loss due to filtering or phase distortion. Band-pass sampling with digital quadrature mixers can meet these requirements since it does not suffer from the phase and amplitude imbalance which is inherent in I and Q baseband sampling.

References

[1] A. I. Sinsky and P. C. P. Wang, "Error Analysis of a Quadrature Coherent Detection Processor," *IEEE Trans. Aerospace Electronic Systems*, vol. AES-10, pp. 880–883, November 1974.

[2] F. E. Churchill et al., "Correction of I and Q Errors in a Coherent Processor," *IEEE Trans. on Aerospace Electronic Systems*, vol. AES-17, no. 1, pp. 131–137, January 1981.

[3] R. Sadr and W. Hurd, "Digital Carrier Demodulation for the DSN Advanced Receiver," *TDA Progress Report 42-93*, vol. January–March, Jet Propulsion Laboratory, Pasadena, California, pp. 45–63, May 15, 1988.

[4] A. V. Oppenheim and R. W. Shafer, Digital Signal Processing, New Jersey: Prentice Hall, 1975.

[5] J. L. Brown, Jr., "On Quadrature Sampling of Bandpass Signals," *IEEE Trans. Aerospace Electronic Systems*, vol. AES-15, no. 3, pp. 366–370, May 1979.

[6] J. L. Brown, Jr., "First-Order Sampling of Bandpass Signals—A New Approach," *IEEE Trans. Information Theory*, vol. IT-26, no. 5, pp. 613–615, September 1980.

[7] Y. K. Belyayev, "Analytic Random Processes," *Theory of Probability and Its Applications*, (English Edition), vol. 4, pp. 402–409, 1959.

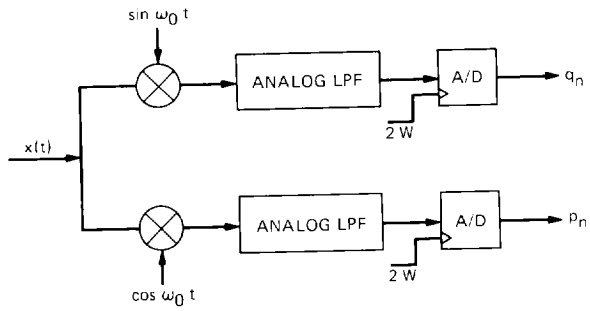

Fig. 1. I and Q baseband sampling with analog quadrature mixers.

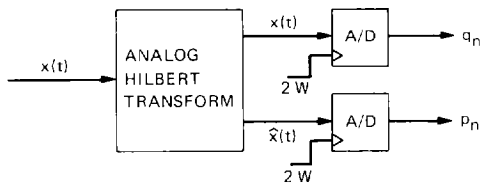

Fig. 2. I and Q baseband sampling with analog Hilbert transform.

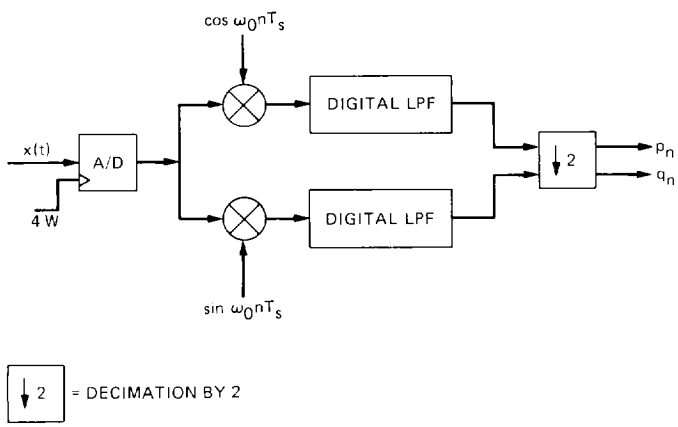

Fig. 3. Band-pass sampling with digital quadrature mixers.

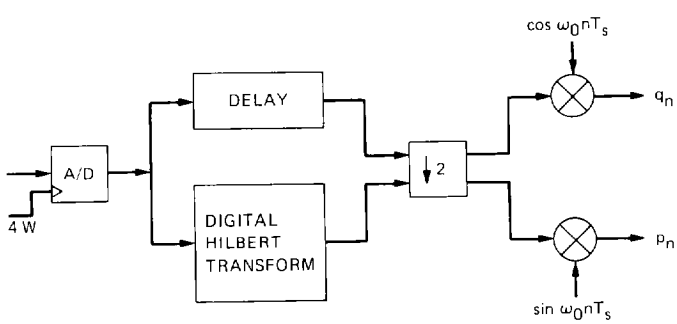

Fig. 4. Band-pass sampling with digital Hilbert transform.