A Multiflare Horn With 1-Megawatt Power Handling Capability

D. J. Hoppe
Radio Frequency and Microwave Subsystems Section

This article describes the design and testing of the prototype horn for the proposed 1-megawatt radar. The unique features of this square horn include a multiflare design in which flare angle changes rather than corrugations are used to generate the required higher-order modes. A five-port combining section is used at the input. The design of this section and the multiflare section are described in this article. Measured radiation patterns are in good agreement with theoretical patterns.

I. Introduction

Deep Space Network (DSN) plans call for increasing the transmitting power of the Goldstone Solar System Radar from the present 365 kW to 1 MW [1]. In the proposed 1-MW configuration, the output from four 250-kW klystron amplifiers must be combined to form the 1-MW signal. This article focuses on the proposed horn for the 1-MW radar, including the input section where the four 250-kW signals will be combined. The horn design closely resembles the design of the horn used at the Haystack Observatory in Westford, Massachusetts [2], with some important simplifications.

The first section of this article describes the input section of the horn and how it interfaces with the four high-power amplifiers and waveguide system. Computer simulation of the combiner section and multiflare sections of the horn are described, and radiation patterns for the final design are presented. The following section compares these theoretical patterns with measured patterns for the prototype horn. Finally, conclusions are drawn and remaining areas of concern are described.

II. Horn Input Section

A. Combiner Section

A simplified block diagram for the proposed 1-MW radar transmitter system is shown in Fig. 1. Four 250-kW klystron amplifiers are fed by a common drive signal and produce the required 1-MW signal. These four signals are carried through a WR125 waveguide to the horn input, where they are further split into eight 125-kW signals. Four of these signals (one pair of klystrons) feed the in-line ports of four orthomode junctions, while the other klystron pair feeds the ortho ports. By correctly adjusting the relative phase of the signals of these klystron pairs, either circular or linear polarization can be generated in the output port of the four orthomodes. For this design, the orthomode output is through 0.95-in. square waveguides rather than the circular waveguides used in the DSN. These four square waveguides then enter the combiner section of the horn, which is described next.

In order to design the combiner section, the possible propagating waveguide modes for a particular dimension of the

square waveguide must be known. The critical dimension a_{max} where a TE_{mn} or TM_{mn} begins to propagate is given by:

$$a_{max} = \frac{\lambda_0 (m^2 + n^2)^{1/2}}{2}$$

For the frequency of interest (8.51 GHz), the critical dimension for several of the most important modes is given in Table 1. It is seen that in the feeding waveguides where a = 0.95 in., only the two orthogonally polarized TE_{10} modes propagate. When the four guides are combined as shown in Fig. 2, the output waveguide has an inner dimension of 2.060 in. From Table 1 it is seen that this is just below the critical dimension for the TE_{30} and TE_{03} modes. For symmetric (in-phase) excitation of the four feeding waveguides, this is the first higher-order mode that is excited in the large waveguide. Therefore, for the chosen dimensions, only the TE_{10} and TE_{01} modes exist in the large output waveguide section of the combiner. Since the TE_{30} and TE_{03} modes are strongly excited at the junction but decay away from the edge, a straight section follows the combiner in order to allow these modes to decay at least 30 dB before the horn begins to flare out. A wall thickness of 0.160 in. between the four input waveguides was chosen to allow sufficient room for cooling channels in the web region. Maximum dimensions were chosen to obtain the highest possible power handling capability.

B. Multiflare Section

Next, the horn must be flared out in order to properly illuminate the 70-m dual-reflector antenna. Since the antenna is a dual-shaped system, optimum efficiency is obtained when the feed radiation pattern matches that of the design feed (in this case the DSN standard 22.37-dB corrugated horn) over the 16 degrees of angle subtended by the subreflector. The TE_{10} mode itself has unequal E- and H-plane patterns and is, therefore, not suitable for illuminating the 70-m antenna alone. In order to obtain equal E- and H-plane patterns for a square horn, higher-order modes must be added to the TE_{10} mode. A method for generating the required modes by using changes in horn flare angle rather than steps or corrugations has been described by Cohn [3]. The multiflare horn is ideally suited for high-power applications, as has been shown by the success of the Haystack system.

The required modes were determined by calculating the radiation from square apertures of different sizes with varying mode mixtures. An extensive computer study determined that the mixture given in Table 2 most closely reproduced the 22.37-dB corrugated horn pattern over the 16-degree range. It is evident from the table that three modes must be added to the TE_{10} mode. These three modes will contain about 17 percent of the propagating power in the ideal design.

The next task was to determine the flare angle changes required to generate such a mode mixture. Initial guesses were made from information in Cohn's original paper, and a more detailed analysis was carried out to fine-tune the horn dimensions. For this part of the analysis, the horn was step-approximated by 200 segments, and the aperture modes were calculated for a TE_{10} mode incident at the input, using a mode-matching method [4]. Two flare angle changes were found to be necessary to generate the required modes. The dimensions of the final horn design are shown in Fig. 3.

Many iterations were required to determine these final dimensions. The mode generation along the length of the horn may be traced by examining the mode content after each of the segments during the analysis. This is only strictly true if reflections from the remainder of the horn are zero, but in this case reflections in the horn are small enough for this to be an excellent approximation. The modes present at various positions along the horn are plotted in Fig. 4. At the input (z = 0), only the TE_{10} mode carries power, and this remains the case through the first 6-in. section of straight guide. At the abrupt flare angle change (z = 6 in.), three additional modes are excited, and coupling between these four modes takes place continuously during the first flared section. This coupling occurs because the waveguide modes are only independent (uncoupled) in a perfectly straight waveguide, not in a tapered horn. Once the guide straightens out again (z = 14.75 in.), the modes propagate independently through the phasing section. The next flare angle change near z = 32 in. generates the mode content required in the aperture. Note that the mode amplitudes are plotted on a linear scale, and the power carried by a particular mode is given by the amplitude squared. At each point in the horn, the sum of the squares of the four mode amplitudes is unity, indicating that power is conserved.

C. Radiation Patterns

The theoretical radiation patterns for the horn in the principal planes are shown in Fig. 5. Important characteristics are the nearly perfectly identical E- and H-plane patterns over the 16-degree angle subtended by the subreflector, and the relatively low sidelobe level. When comparing these patterns with the 22.37-dB circular corrugated horn patterns, one notes that they are virtually identical over the required 16-degree angle. The H-plane pattern for this horn has a higher first sidelobe than the 22.37-dB pattern, while the first sidelobe in the E-plane is lower. The 22.37-dB pattern actually has a filled-in first sidelobe that peaks at about −25 dB. Calculated patterns for the multiflare horn are nearly sidelobe free in the 45-degree plane. These effects help to compensate for the higher side-

lobe in the H-plane. Calculated 70-m antenna gain for this multiflare horn and the 22.37-dB horn are within 0.03 dB of agreement.

III. Measured Results

A photograph of the prototype horn for which radiation patterns were measured is shown in Fig. 6. The E-plane and H-plane patterns of this horn were measured and are compared to the theoretical patterns in Fig. 7. Good agreement can be seen throughout the main beam region, with discrepancies of a few dB in the sidelobe levels in both planes. Although the agreement for this horn is not as close as that for circular horns analyzed using the mode-matching method, the accuracy is adequate for design purposes.

IV. Conclusions

A design for a 1-megawatt feedhorn has been presented, including a review of the design method. Measured patterns for a prototype horn are in good agreement with those predicted by the theory. Before a final high-power version of this horn is fabricated, work must be completed on the matching of the combiner section and also on the specifics of the cooling passages, due to the high power levels involved.

References

[1] A. M. Bhanji, D. J. Hoppe, B. L. Conroy, and A. J. Freiley, "Conceptual Design of a 1-MW CW X-Band Transmitter for Planetary Radar," *TDA Progress Report 42-95*, vol. July–September 1988, Jet Propulsion Laboratory, Pasadena, California, pp. 97–111, November 15, 1988.

[2] W. North, "Haystack Hill Long Range Imaging Transmitter," *Proceedings of the 13th Pulse Power Modulator Symposium*, pp. 247–253, 1978.

[3] S. B. Cohn, "Flare-angle Changes in a Horn as a Means of Pattern Control," *Microwave J.*, vol. 13, pp. 41–46, October 1970.

[4] D. J. Hoppe, "Modal Analysis Applied to Circular, Rectangular, and Coaxial Waveguides," *TDA Progress Report 42-95*, vol. July–September 1988, Jet Propulsion Laboratory, Pasadena, California, pp. 89–96, November 15, 1988.

Table 1. Square waveguide cutoff dimension for lower order modes at 8.51 GHz

Mode	8.51-GHz cutoff dimension, in.
$TE_{10,01}$	0.69343
TE_{11}, TM_{11}	0.98066
$TE_{20,02}$	1.38606
$TE_{21,12}$, $TM_{21,12}$	1.55056
TE_{22}, TM_{22}	1.96132
$TE_{30,03}$	2.08029
$TE_{31,13}$, $TM_{31,13}$	2.19282
$TE_{32,23}$, $TM_{32,23}$	2.50020
TE_{33}, TM_{33}	2.94197

Table 2. Modes required in a 6.1-in. square waveguide to duplicate 22.37-dB corrugated horn pattern

Mode	Mode amplitude	Mode power, percent	Mode phase, deg
TE_{10}	0.91	83.2	0
TE_{30}	0.07	0.5	90
TE_{12}	0.16	2.6	180
TM_{12}	0.37	13.7	180
		100.0	

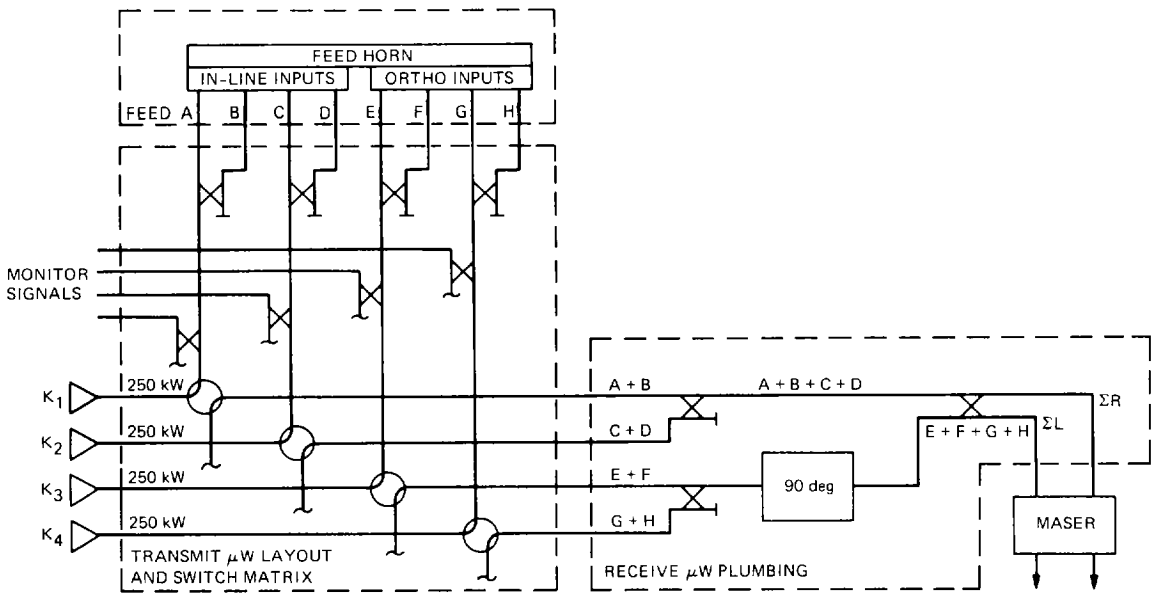

Fig. 1. 1-MW radar transmission line system.

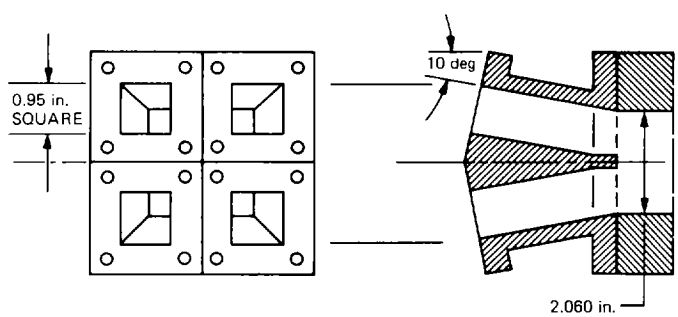

Fig. 2. 1-MW horn combiner section.

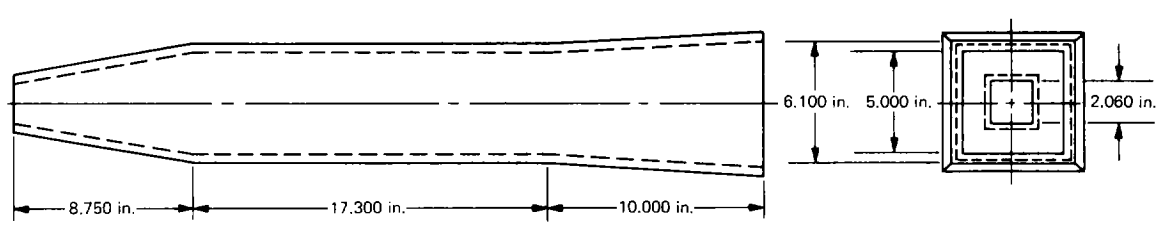

Fig. 3. 1-MW multiflare horn dimensions.

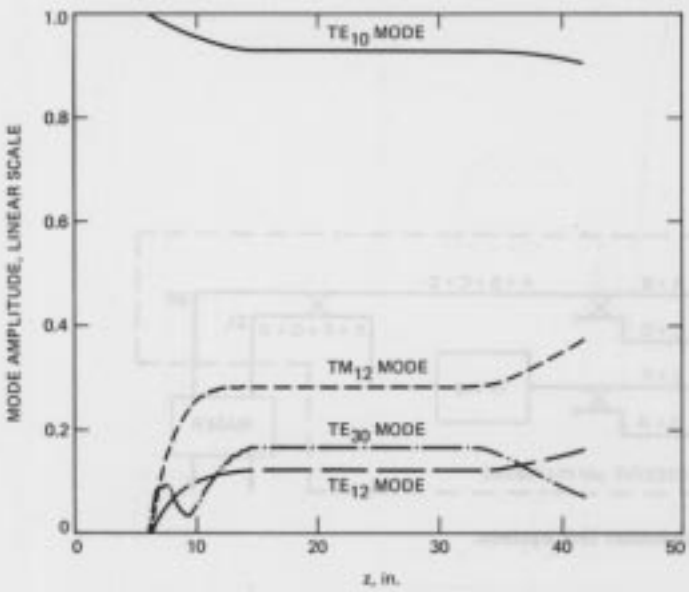

Fig. 4. Mode generation along the multiflare horn.

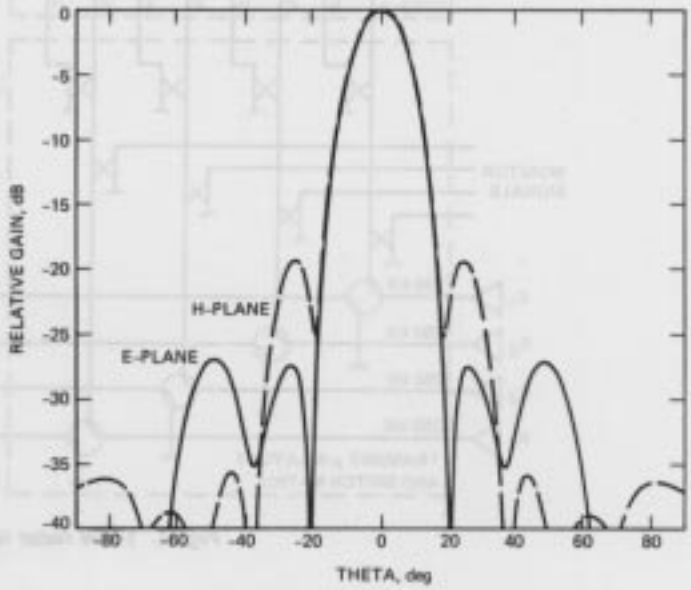

Fig. 5. Theoretical horn patterns.

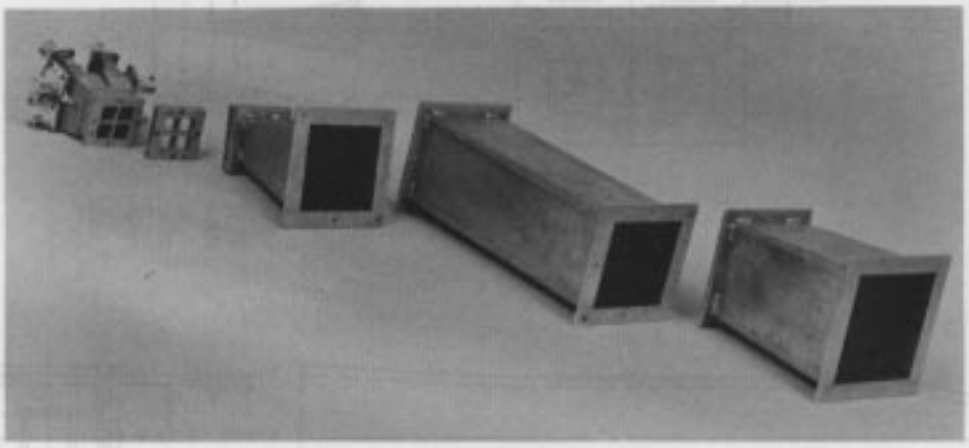

Fig. 6. Prototype horn.

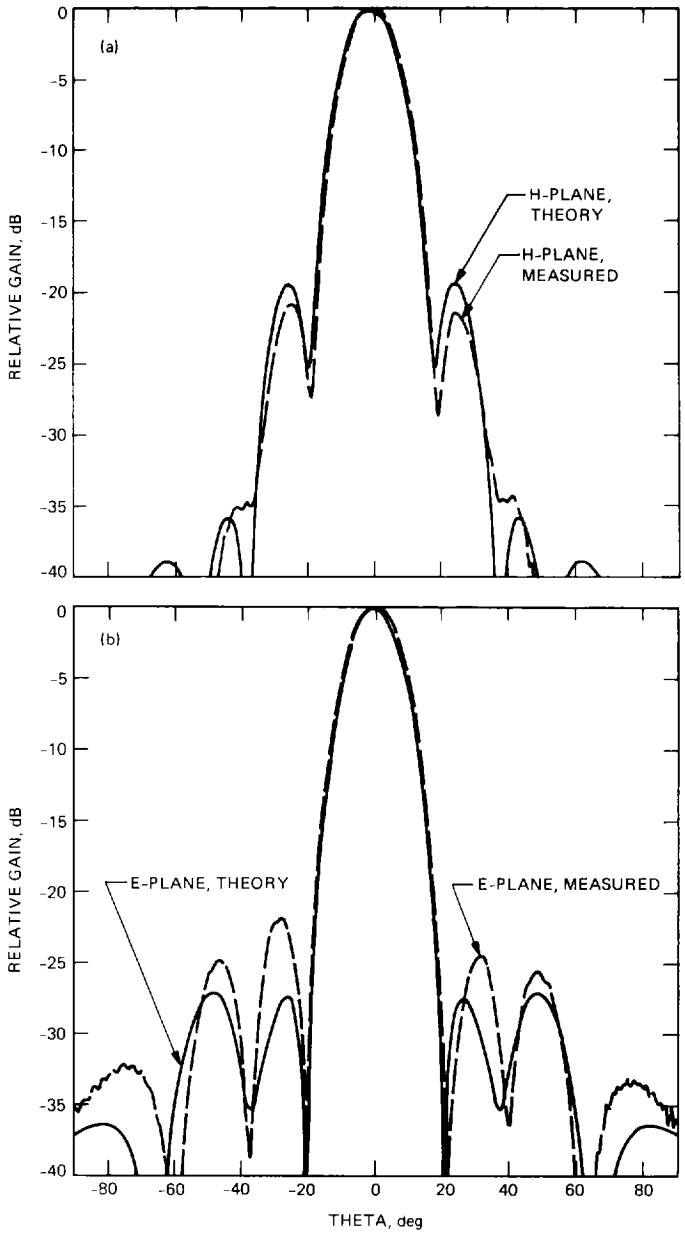

Fig. 7. Comparison between theoretical and measured patterns: (a) H-plane; (b) E-plane.