X-Band Uplink Feedcone Capabilities, Components, and Layout

H. Marlin, A. Freiley, and R. Hartop
Radio Frequency and Microwave Subsystems Section

Two new X- (7.2 GHz up, 8.4 GHz down) and S-band (2.1 to 2.3 GHz) common aperture (XSC) feedcones are being added to the DSS 45 and DSS 65 34-Meter High Efficiency Antennas. These new feedcones are modifications of the existing SXC feedcone design incorporating a new high power (20-kW) X-band transmitter. The modified Antenna Microwave Subsystem design also incorporates two additional X-band low noise amplifiers and greater phase stability performance to meet both the increased stability requirements for Galileo gravity wave experiments and requirements for spacecraft navigation near the sun. A third XSC will be constructed for DSS 15 later.

I. Introduction

This article is the first of several describing the implementation and performance of the new X-band uplink (7.2 GHz) feedcones (XSC), two of which are now being assembled at JPL. One will be mounted on the new 34-m high-efficiency antenna at DSS 65, and the other will replace the SXC feedcone presently mounted on the DSS 45 antenna. The two existing SXC feedcones, designed and manufactured by Ford Aerospace, Palo Alto, CA, are repackaged versions of the first generation X/S listen-only feedcone (Ref. 1). Principal characteristics of the new XSC feedcone are X-band (7.2 GHz) 20-kW transmission, X-band diplexed operation, X-band (8.4 GHz down) RCP and LCP simultaneous reception, and subsystem monitor and control from the Local Monitor and Control (LMC) Center through the DSN Local Area Network (LAN). Figure 1 is a functional block diagram of the XSC feedcone. Blocks identified with a shaded corner square are new/improved components or assemblies. The XSC feedcone was designed to meet the new, stringent X-band phase stability specifications for the Galileo mission.

A prototype X-band receive/transmit feedcone, a second generation X/S feedcone, has been operated at DSS 13 over the last few years (Refs. 1 and 2). Significant overall system stability testing has been performed on this system, and new system stability measurement equipment and techniques have been developed in conjunction with the testing (Ref. 3).

The new XSC configuration allows either X-band maser to be switched to diplexed or low-noise operation with either LCP or RCP polarization. A new Bethe-hole directional coupler located just before the feedhorn X-band input section allows injection of phase calibration signals to both X-band receive

polarizations at the highest possible point in the system. Table 1 gives a comparison of TDA-specified antenna microwave subsystem performance requirements with the current design. Table 2 provides system noise temperature estimates of the XSC configuration.

The DSS 65 feedcone is scheduled to arrive in Spain and be mounted on the antenna during the month of May 1987, with the antenna operational by January 1988. The DSS 45 antenna, with the new feedcone installed, will be returned to operations in February 1988.

II. Layout

The existing SXC listen-only feedcones were designed with the anticipation of future addition of S- and X-band 20-kW diplexed transmit capability. The initial XSC layout effort consisted of adding two additional X-band low noise amplifiers, a new cooled S-band FET low noise amplifier, a new 20-kW X-band transmitter assembly, and new waveguide cooling manifolds to the existing SXC design. The initial XSC layout plan was based on the Ford SXC design, which was in turn a development of the existing DSS 13 feedcone. This design presented few serious access or maintenance problems. As the basic design was modified to meet the new X-band uplink stability requirements, much of the Frequency and Timing Subsystem (FTS) equipment and Receiver-Exciter Subsystem (RCV) equipment normally located elsewhere on the antenna now would apparently need to be located within the feedcone. The principal driver was the need to reduce temperature-induced phase changes in coaxial cables by reducing their length to a minimum. However, as the design effort progressed, it became increasingly apparent that the feedcone was becoming too crowded for proper or safe maintenance. A partial mock-up was constructed to allow operations as well as engineering personnel to evaluate the equipment layout in terms of maintenance. The design was determined to be unacceptable from a maintenance standpoint.

The subsystem requirements were reviewed, and a number of possible system configurations were devised that moved some of the equipment into the elevation room. After careful review, it was decided to move the Exciter (RCV) and X5 Frequency Multiplier/100-MHz Distribution (FTS) into the elevation room, leaving the transmitter in the feedcone. The phase-critical cables running between the elevation room and the feedcone would be placed in an air-conditioned duct. The resulting redesigned feedcone is now acceptable in terms of maintenance and operations. The addition of 20-kW S-band diplexed capability to the XSC feedcone should S-band transmission become a future requirement will be difficult in that the space allowed in the SXC feedcone design for the S-band diplexer and associated waveguide has of necessity been eliminated.

III. Feedcone Components

A. Broadband Polarizer

The quarterwave plate polarizer used in the SXC feedcones has insufficient bandwidth in terms of VSWR and axial ratio to operate over the needed 7145- to 8600-MHz range. A water-cooled iris type polarizer of the design tested in the second generation X/S feedcone (Ref. 4) is being fabricated for use in the XSC feedcone using the electroformed copper process.

B. X-Band Diplexer

The diplexer, a modified version of the three-section diplexer used in the second generation X/S feedcone installed at DSS 13 (Ref. 4) has lower insertion loss, improved match and lower fabrication cost and is a single copper electroformed, T-shaped, three-port, water-cooled assembly. The diplexer is made up of three major circuits – the combiner section, a transmitter filter, and a receiver filter. The transmitter filter consists of a seven-cavity bandpass filter and a four-cavity bandstop filter designed to pass transmitter frequencies (7145 to 7235 MHz) and reject receiver frequencies (8200 to 8600 MHz). The receiver filter consists of a one-cavity bandpass filter, a reduced width waveguide high-pass filter, and a two-cavity bandstop filter; the filter is designed to pass receiver frequencies (8200 to 8600 MHz) and reject transmitter frequencies (7145 to 7235 MHz). Two production units have been fabricated. The diplexer isolation/rejection measurements are 102 dB at 7145 to 7235 MHz and 80 dB at 8200 to 8600 MHz.

C. X-Band Preamplifier Filter

The X-Band Preamplifier Filter (XPF) (Ref. 5) is a five-cavity band reject filter (7145 to 7235 MHz) that is placed between the orthomode and the maser in the low-noise path to provide sufficient maser/X-band transmitter isolation as well as to protect the maser from X-band transmit frequency signals from external sources. The filter is fabricated from standard copper waveguide and is uncooled. The XPF measured rejection is >75 dB; measured insertion loss is <0.03 dB.

D. X-Band Orthomode Junction

The orthomode junction is an improved water-cooled, high-power, broadband version of the SXC orthomode junction. It is fabricated using the copper electroform method. Testing of production orthomodes is now in progress.

E. X-Band PCG Coupler

The PCG coupler, located between the feedhorn and the polarizer, provides a means of injecting phase calibration signals into the feed system (7900 to 8900 MHz). The coupler is a unique form of a Bethe-hole directional coupler using two

properly sized and excited opposed coupling holes in circular waveguide. It is necessary to maintain bilateral symmetry because the circular waveguide at this point in the feed system can support the propagation of higher order transverse magnetic (TM) modes. These TM modes could seriously degrade the illumination efficiency of the feed. A high-pass filter consisting of a section of reduced-width waveguide is used to protect the comb generator assembly (Frequency and Timing Subsystem) from coupled transmitter power. The fabrication of the first production unit is complete. Measured coupling is 38.2 ± 0.5 dB. When installed, the PCG directional coupler is rotated 45 degrees relative to the principal planes of the orthomode, allowing the same signals to be injected into both orthogonal arms of the orthomode. The effective installed coupling value is therefore increased by 3 dB to 41.2 ± 0.5 dB.

F. WR430 X-Band Reject Filter

The amount of leakage of X-band transmitter power into the S-band low noise amplifier through the combiner is uncertain. The X-band reject filter will increase the X- to S-band isolation by 60 dB. During testing of the feedcone, measurements will be performed to determine if the filter can perhaps be removed and replaced with a straight section of waveguide. The filter is fabricated from standard WR430 waveguide and is designed for receive applications only. Fabrication has started, with delivery scheduled for 26 September 1986.

IV. Status

The assembly of the feedcones is in progress in the High Bay Building 280. Feedhorns have been installed in both and the installation of the waveguide into cone SN 3 (for DSS 65) and SN 4 (DSS 45) has begun.

The addition of X-band uplink capability to DSS 15 is planned for late 1988. The SXC feedcone now mounted on DSS 45 will be returned to JPL after it is replaced by the XSC feedcone. It will be refurbished and upgraded to XSC capabilities, and then mounted on the DSS 15 antenna. The SXC feedcone now at DSS 15 will then be stored for future modifications as required.

Acknowledgments

The authors would like to acknowledge Dr. Farzin Manshadi and Phil Stanton for microwave component design work, Gary Bury and Bob Verish for cone layout and subsystem interface design work, H. Reilly and Bill Folwell for test support, and Dan Vienna for procurement support.

References

1. Williams, W., and Reilly, H., "A Prototype DSN X/S-Band Feed: DSS 13 Application Status (Fourth Report)," *TDA Progress Report 42-60*, December 15, 1980, Jet Propulsion Laboratory, Pasadena, Calif., pp. 77–88.

2. Hartop, R., Johns, C., and Kolby, R., "X-Band Uplink Ground Systems Development," *TDA Progress Report 42-56*, January and February, 1980, Jet Propulsion Laboratory, Pasadena, Calif., pp. 48–58.

3. Otoshi, T., "DSN End-to-End Stability Testing," *TDA Progress Report 42-86*, Jet Propulsion Laboratory, Pasadena, Calif., August 15, 1986, pp. 1–14.

4. Withington, J. R., "Second-Generation X/S Feedcone: Capabilities, Layout and Components," *TDA Progress Report 42-63*, March and April, 1981, Jet Propulsion Laboratory, Pasadena, Calif., pp. 97–103.

5. Manshadi, F., "X-Band Preamplifier Filter," *TDA Progress Report 42-86*, Jet Propulsion Laboratory, Pasadena, Calif., August 15, 1986, pp. 227–230.

Table 1. Antenna Microwave Subsystem Performance Requirements vs Design

Parameter	Requirement	Design
Receiving:		
S-band:		
Frequency range, MHz	2200 to 2300	2200 to 2300
Antenna gain, dBi	55.8 + 0.0, -0.5	55.8 + 0.0, -0.5[a]
System noise temp:		
FET, K	<150	55 ± 10[b]
Polarization	RCP/LCP remotely selectable	RCP/LCP remotely selectable
Ellipticity, dB p-p	1.0	1.0
X-band:		
Frequency range:		
Maser (Blk III) MHz	8400 to 8500	8400 to 8500
FET, MHz	8200 to 8600	8200 to 8600
Antenna gain, dBi	67.3 + 0.0, -0.8	67.3 + 0.0, -0.8[a]
System noise temp:		
Maser (Blk II):		
Low noise, K	18.5 ± 2	TWM I:20.5 TWM II: 24.5[c]
Diplexed, K	21.5 ± 3	TWM I: 29.9 TWM II: 33.8[c]
FET, K	<150	60 ± 10[d]
Polarization	RCP/LCP remotely selectable	RCP/LCP remotely selectable
Ellipticity, dB p-p	0.7	0.7
Transmitting:		
S-band	Not required	None
X-band:		
Frequency range, MHz	7145 to 7335	7145 to 7335
Antenna gain, dBi	65.9 + 0.0, -0.8	65.9 + 0.0, -0.8[a]
Polarization	RCP/LCP remotely selectable	RCP/LCP remotely selectable
Ellipticity, dB p-p	<6	1
Phase stability:		
Uplink waveguide $\Delta f/f$	0.5×10^{-15} per 1000 s	0.31×10^{-15} per 1000 s[e]
Downlink waveguide $\Delta f/f$	0.5×10^{-15} per 1000 s	0.17×10^{-15} per 1000 s[e]

Notes:

[a]Gain dependent on reflector RMS surface tolerance and other mechanical parameters of antenna structure.

[b]System noise temperature and bandwidth specification dependent on FET bandwidth. A 14 K noise contribution was assumed to achieve this value.

[c]Dependent on achievement of 100-MHz bandwidth and 3.5 K noise contribution.

[d]System noise temperature and bandwidth specification dependent on FET bandwidth. A 28 K noise contribution was assumed to achieve this value.

[e]A warmup period may be required before the Antenna Microwave Subsystem is able to maintain required phase stability.

Table 2. Antenna Microwave Subsystem Operation System Temperature Noise Estimates

Element	Noise, K	Element	Noise, K
TWM I low noise		TWM II diplexed	
Feed noise	8.03	Feed noise	21.30
Maser	3.5	Maser	3.5
RCV followup	0.5	RCV followup	0.5
Atmosphere	2.5	Atmosphere	2.5
Galactic	2.7	Galactic	2.7
System temperature (ground-zenith)	17.23	System temperature (ground-zenith)	30.50
Antenna noise	3.3	Antenna noise	3.3
Total system noise (antenna-zenith)	20.53	Total system noise (antenna-zenith)	33.80
TWM II low noise		X-band FET	
Feed noise	11.96	Feed noise	18.97
Maser	3.5	FET	28.0
RCV followup	0.5	RCV followup	0.5
Atmosphere	2.5	Atmosphere	2.5
Galactic	2.7	Galactic	2.7
System temperature (ground-zenith)	21.16	System temperature (ground-zenith)	52.67
Antenna noise	3.3	Antenna noise	3.3
Total system noise (antenna-zenith)	24.45	Total system noise (antenna-zenith)	55.97
TWM I diplexed		S-band FET	
Feed noise	17.38	Feed noise	19.18
Maser	3.5	FET	14.0
RCV followup	0.5	RCV followup	0.5
Atmosphere	2.5	Atmosphere	2.5
Galactic	2.7	Galactic	2.7
System temperature (ground-zenith)	26.58	System temperature (ground-zenith)	38.88
Antenna noise	3.3	Antenna noise	10.60
Total system noise (antenna-zenith)	29.88	Total system noise (antenna-zenith)	49.48

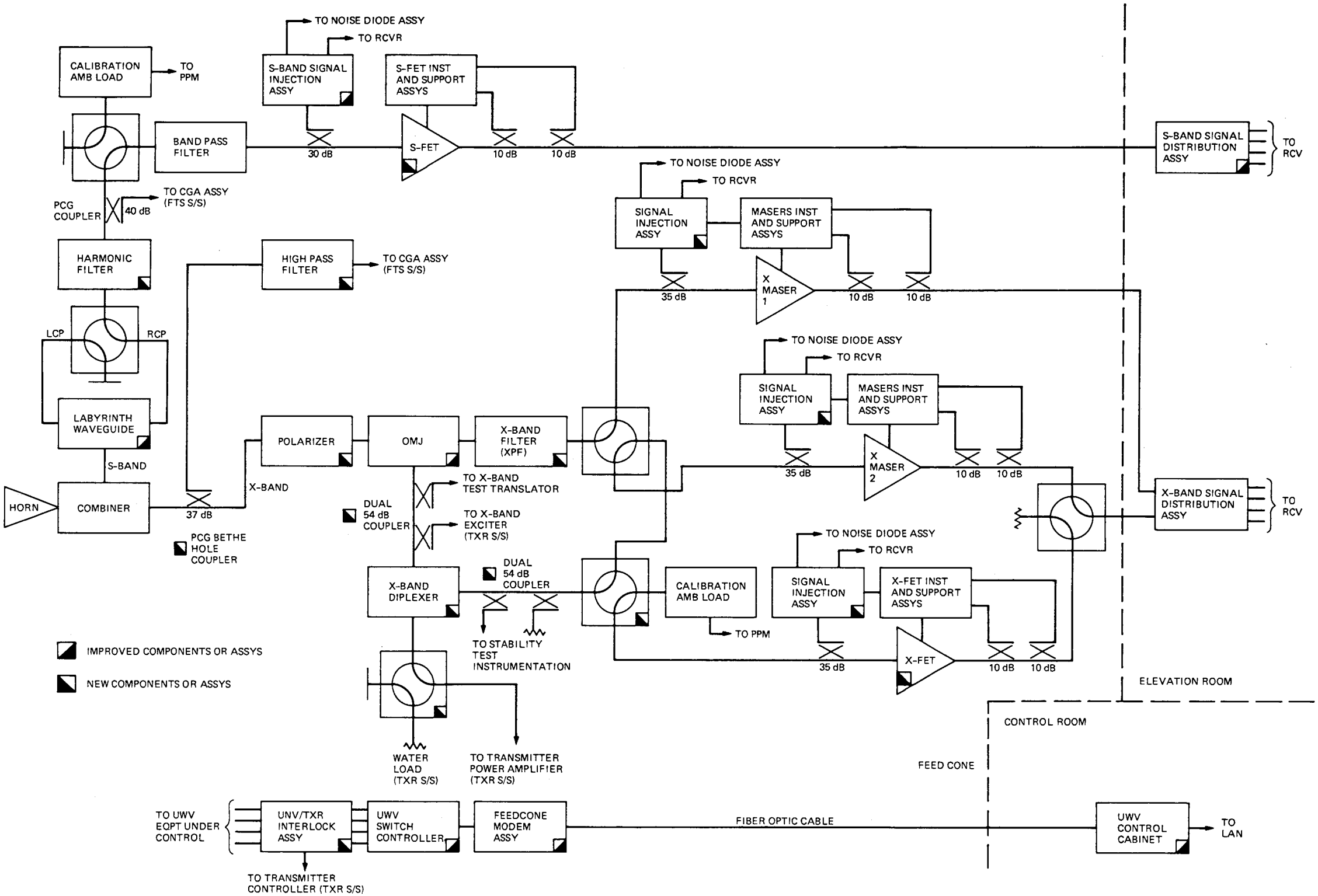

Fig. 1. XSC Functional Block Diagram